Home

About

Education

Skills

Projects

Contact

Footer

PRUTHVIRAJ SANJAY KUMAR PATIL

PRUTHVIRAJ PATIL: My name is Pruthviraj Sanjay Kumar Patil.I am currently pursuing my B.Tech in Electronics And Telecommunication Engineering. I am a passionate and hardworking student who is interested in programming and the integration of core electronics with software

My goal is to continuously improve my technical knowledge in electronics and programming while working on practical projects that solve real-world problems. I aim to become a skilled engineer who can contribute to innovative technologies and make a positive impact in the field of engineering

Home

About

Education

Skills

Projects

Contact

Footer

About Me

I am Pruthviraj Sanjay Kumar Patil, currently pursuing my B.Tech in Electronics and Telecommunication Engineering. I am a passionate and hardworking student with a strong interest in programming and technology. I enjoy learning new concepts and applying them to practical projects. My aim is to develop skills that combine electronics with software to create innovative solutions.

I am an enthusiastic B.Tech student in Electronics and Telecommunication Engineering with a keen interest in programming and modern technology. I enjoy exploring how software can be integrated with core electronics systems to build smart and efficient solutions. I believe in continuous learning, problem solving, and improving my technical skills through practical projects and hands-on experience.

Education

🌺 **B.Tech- Pursing (Electronics And Telecommunication Engineering):- MIT Academy Of Engineering, Alandi, Pune**

🌺 **12TH (AISSCE-CBSE):- PM Shri Kendriya Vidyalaya No 2 AFS Pune-32 - Secured 91.00% in Science with Mathematics and Biology(PCMB)- 3rd Position in Science Stream**

🌺 **10TH (AISSE-CBSE):-PM Shri Kendriya Vidyalaya No 2 AFS Pune-32- Secured 85.80%**

Home

About

Education

Skills

Projects

Contact

Footer

Skills

- C Programming
- Python
- Tinkercad
- NI Multisim
- HTML & CSS
- KiCad (PCB Designing)

Home

About

Education

Skills

Projects

Contact

Footer

Projects

- 🌺 **Simple Calculator Program**
- 🌺 **Mini Software Games**
- 🌺 **Audio Level Visualizer using ICs**
- 🌺 **Radar Detection using Arduino Uno**
- 🌺 **Temperature Level Showing using BJT**

Home

About

Education

Skills

Projects

Contact

Footer

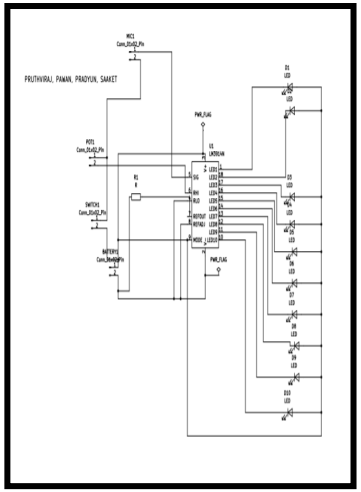

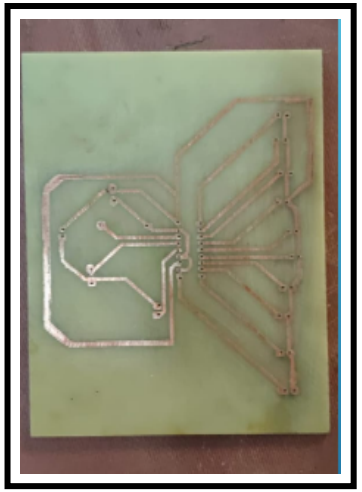

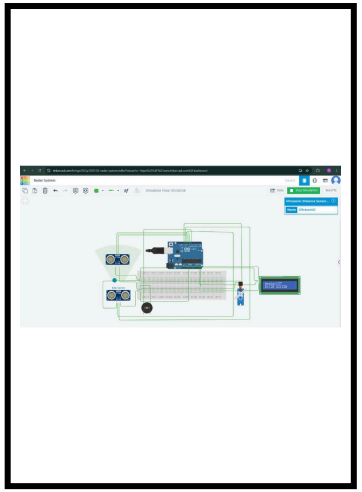

Contact

🌺 EMAIL ID

pruthvirajspatil1@gmail.com

pruthvirajspatil2@gmail.com

pruthvirajspatil3@gmail.com

202501070098@mitaoe.ac.in

Home

About

Education

Skills

Projects

Contact

Footer

🌺 LINKED IN ACCOUNT

CLICK ON THE BUTTON TO VIEW THE LINKEDIN ACCOUNT

🌺 GITHUB ACCOUNT

CLICK ON THE BUTTON TO VIEW THE GITHUB ACCOUNT

Footer

Â© 2026 Pruthviraj Patil

Built with HTML & CSS

Home

About

Education

Skills

Projects

Contact

Footer