ADC Interfacing diagram:

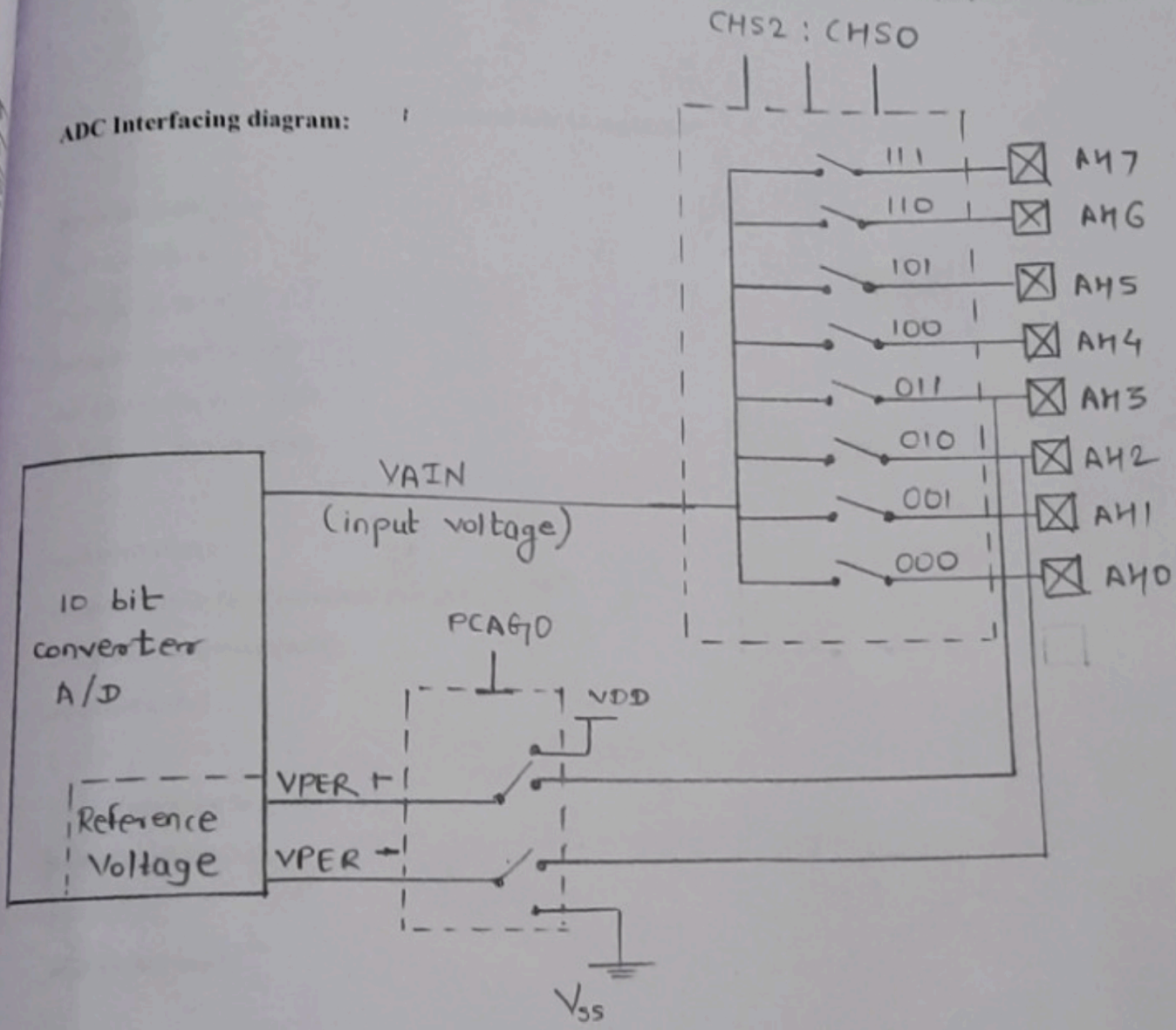

Connections:

To give analog input from potentiometer R20 present in Analog Input region on STK keep S4.1 in ON position,

To give external analog input, keep S4.1 in OFF position and connect external analog input 1 of AIN_EXT connector. Analog input range is from 0 to 3.3V

Procedure:

To Edit / Compile/ Generate Hex file.

To download and run this program.

Output:

You can see digital of reading of the corresponding analog input using USART.

Note :

Keep S4.1 switch in OFF position, after execution of program.

Keep S4.2 switch in OFF position, after execution of program.

Conclusion: In this experiments we have studied the ACbC Analog to Digital conversion. We have interpaced ADC with PIC18F4520.

- Pin 7 to 10 = No Connection/GND
- Pin 11 = RC2 (Used as D4 of LCD)
- Pin 12 = RE0 (Used as D5 of LCD)
- Pin 13 = RE1 (Used as D6 of LCD)
- Pin 14 = RE2 (Used as D7 of LCD)
- Pin 15 = Back lighting □ Pin 16 = GND

Interfacing Diagram: LCD module Interfacing :

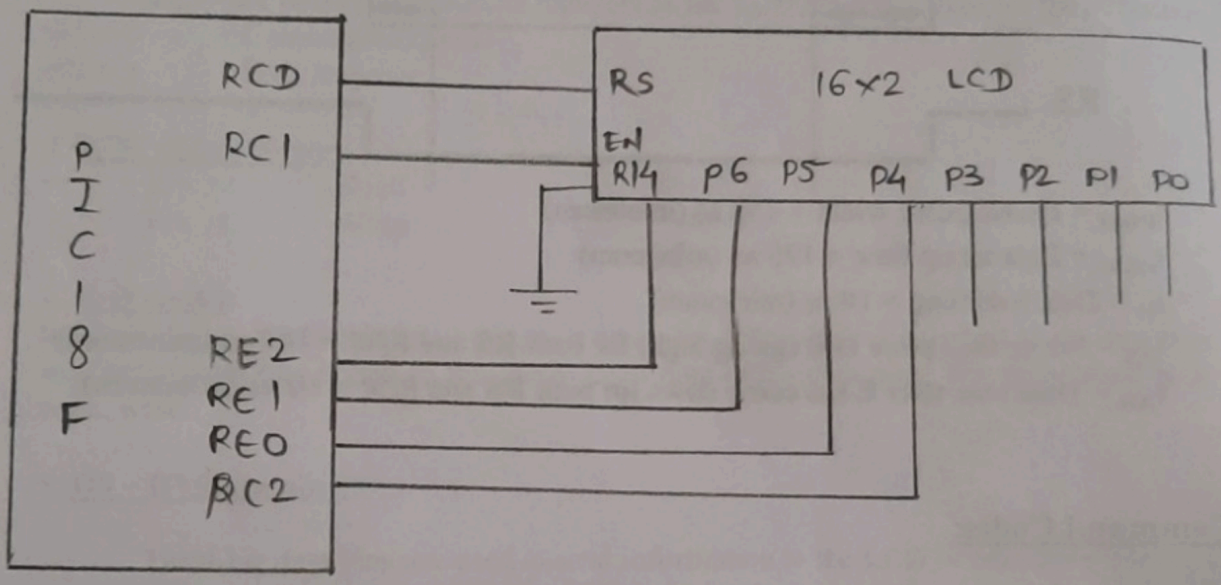

Procedure:

1. To Edit / Compile/ Generate Hex file.
2. To download and run this program.

Output:

You can see the message **Hello World** on LCD. If required reset the board.

Conclusion:

In this experiment we have studied the pin configuration. Also different hand shak required for interfacing. We have studied interface 16 X2 LCD with PIC18F micr

Interfacing Diagram: Generation of sq. wave

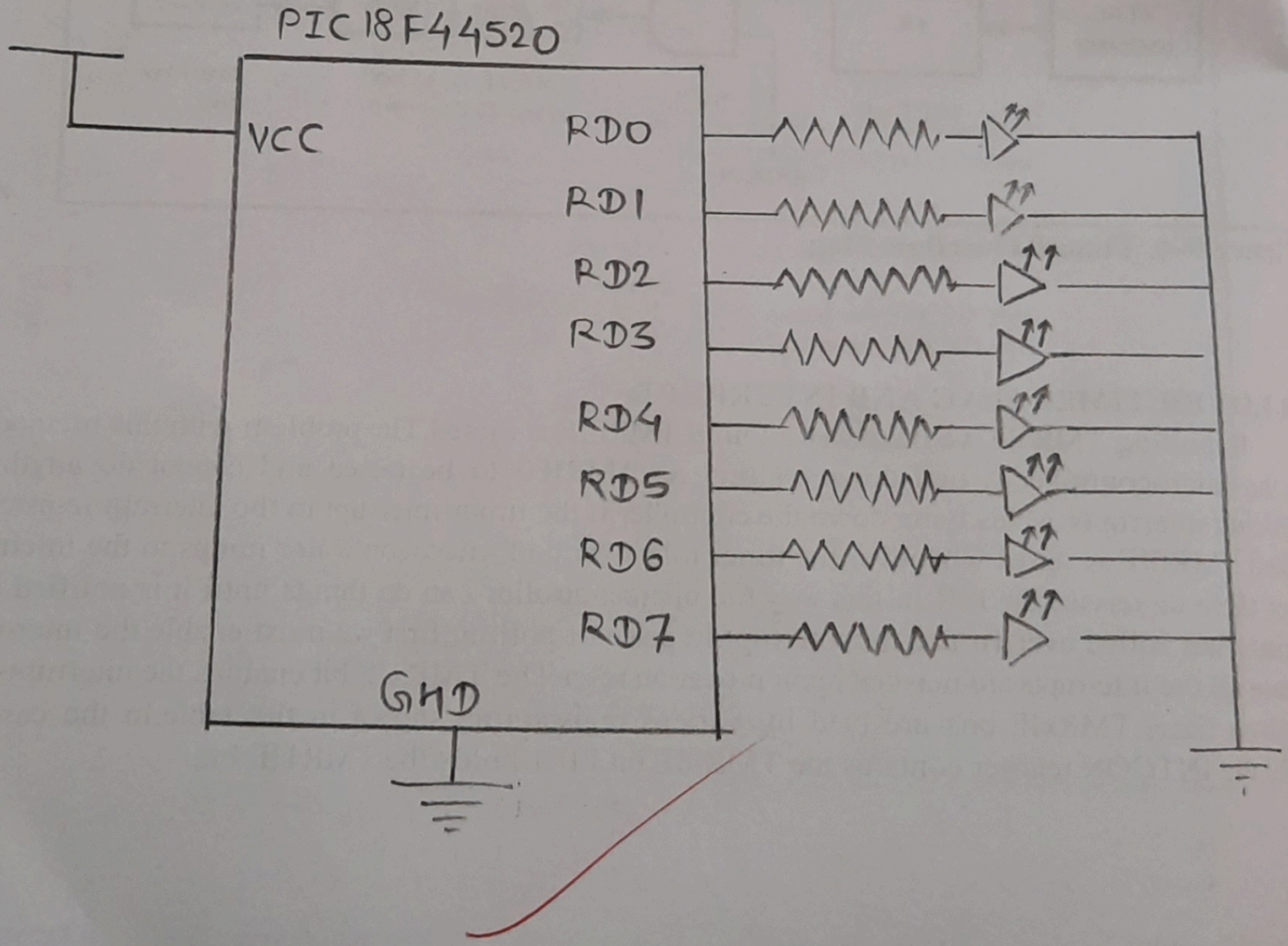

Interfacing Diagram: Interfacing LED, buzzer, relay -

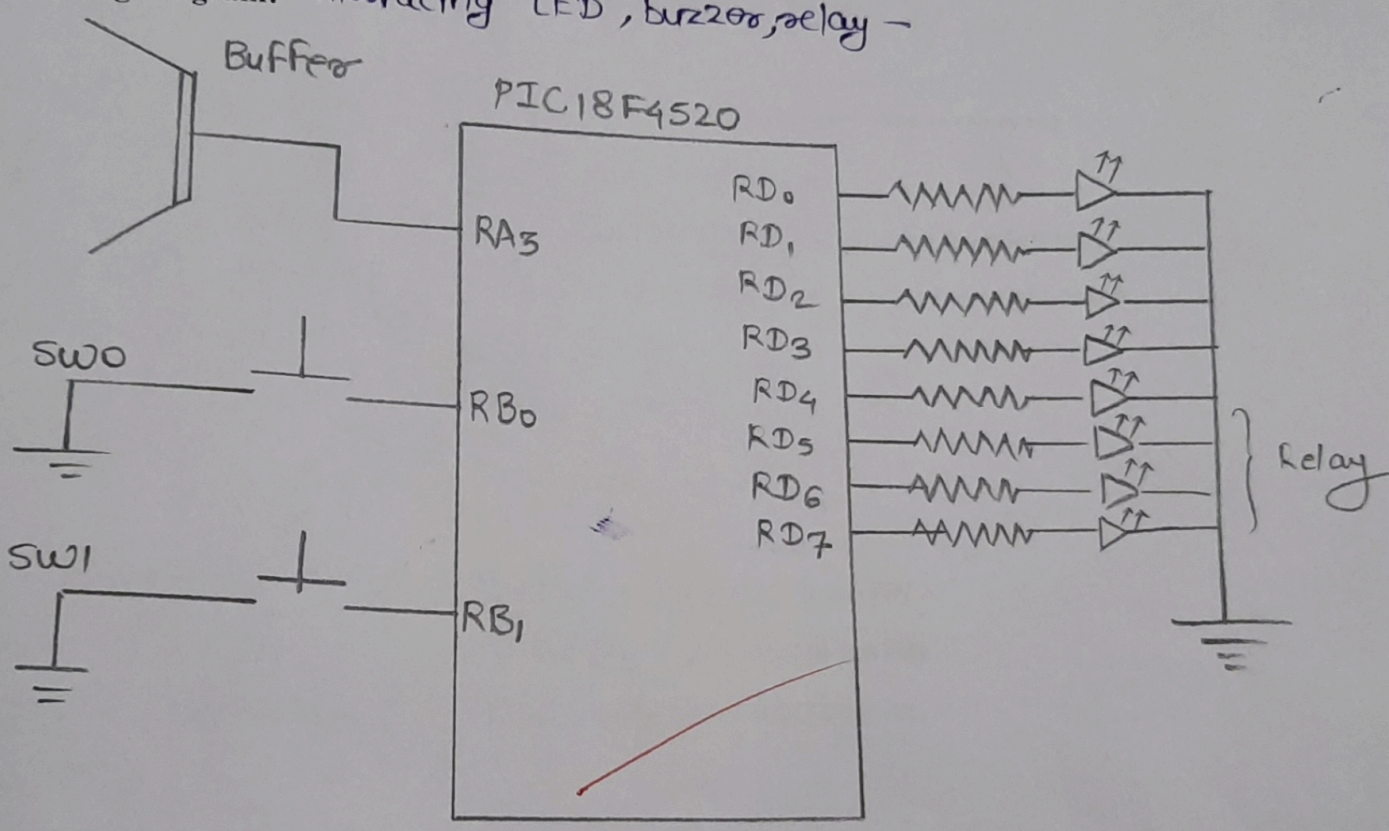

Connections:

1. Keep S13.2 switch in ON position.
2. 8 LEDs (D9 to D16) present on STK-PIC18F4520 V1.1 are connected to PORT D by
3. Common Anode method.

rocedure:

1. To Edit / Compile/ Generate Hex file.
2. To download and run this program.
3. Output:
4. You can see blinking of LEDs.

te: Keep S13.2 switch in OFF position to save power, after execution of program.

nclusion:

In this experiment we have studied the port st
PIC8F4520 micro-controller. Also we have stu
w to interface LED Module Buzzer and Relay
C18F4520.

11/22

Interfacing Diagram: 7 segment module interfacing -

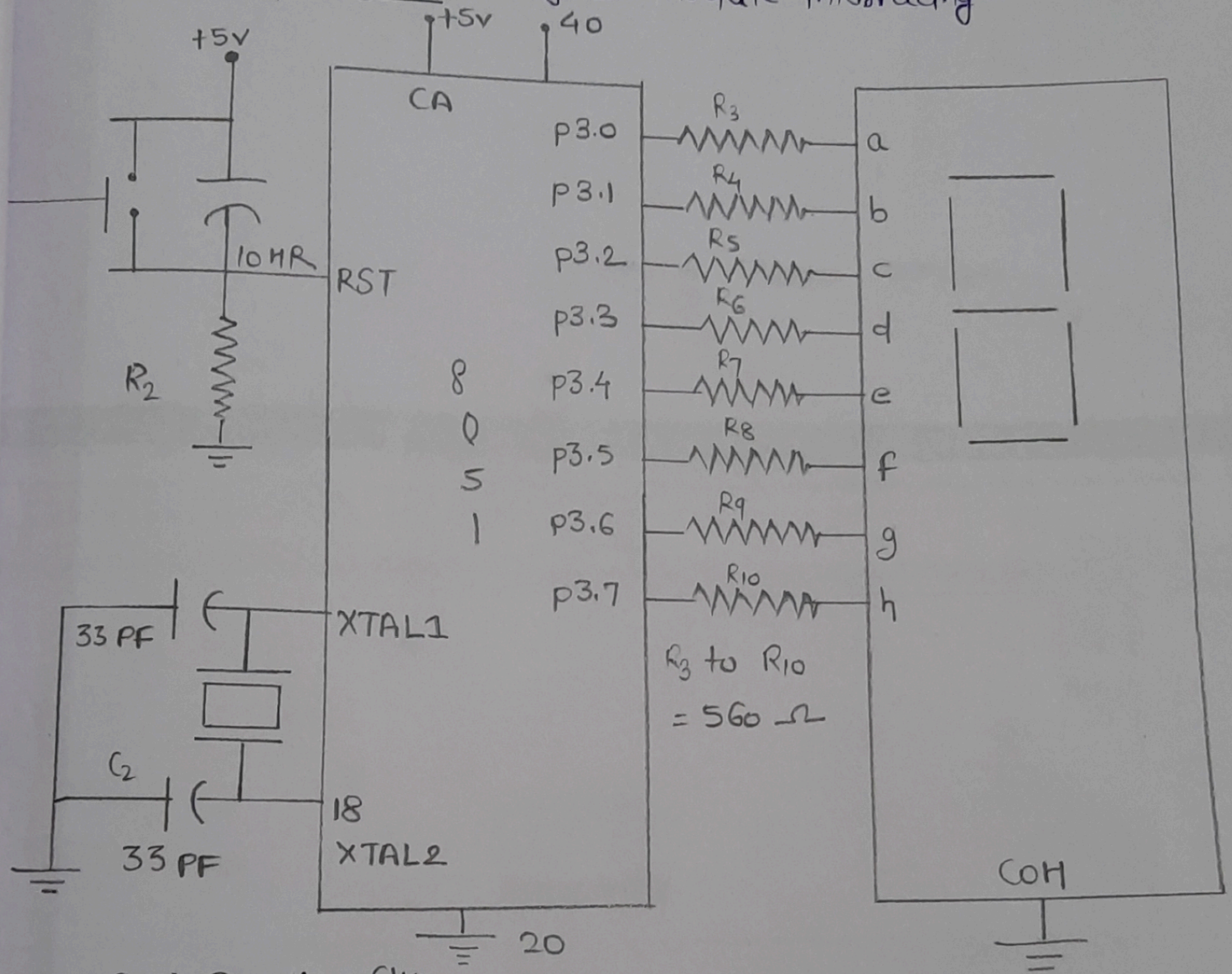

Study Questions GHD

1) Explain types of seven segment displays with diagram.

Conclusion -

In this experiment we have learned and studied seven segment module interfacing with Micro-conti will have studied the port of 8051 kit. Interfa seven segment module to 8051 kit.

Interfacing Diagram: LED module Interfacing -

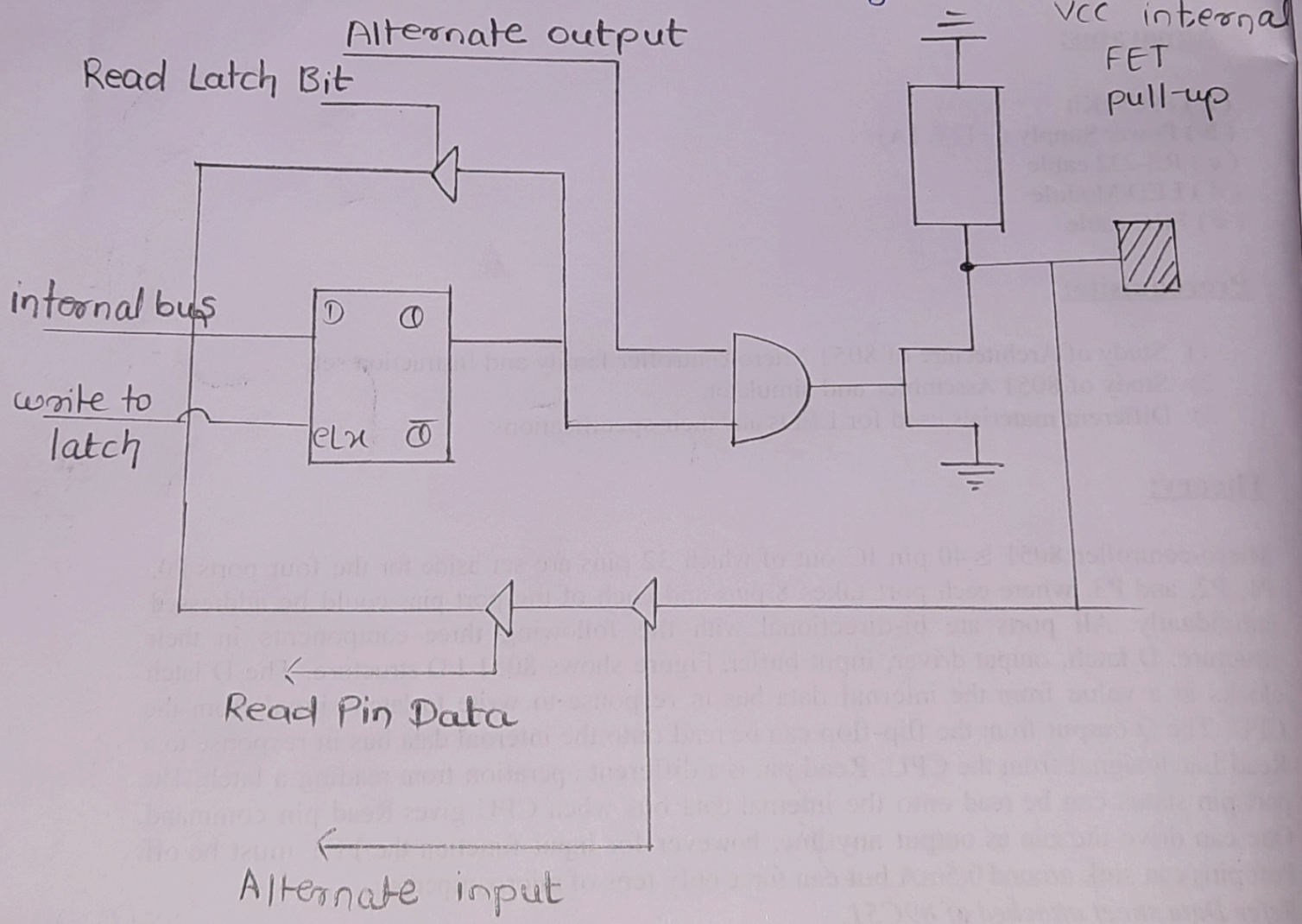

LED's port