| REVISION RECORD | | | |
|---|---|---|---|
| LTR | ECO NO: | APPROVED: | DATE: |
| | | | |
| | | | |
| | | | |
| | | | |

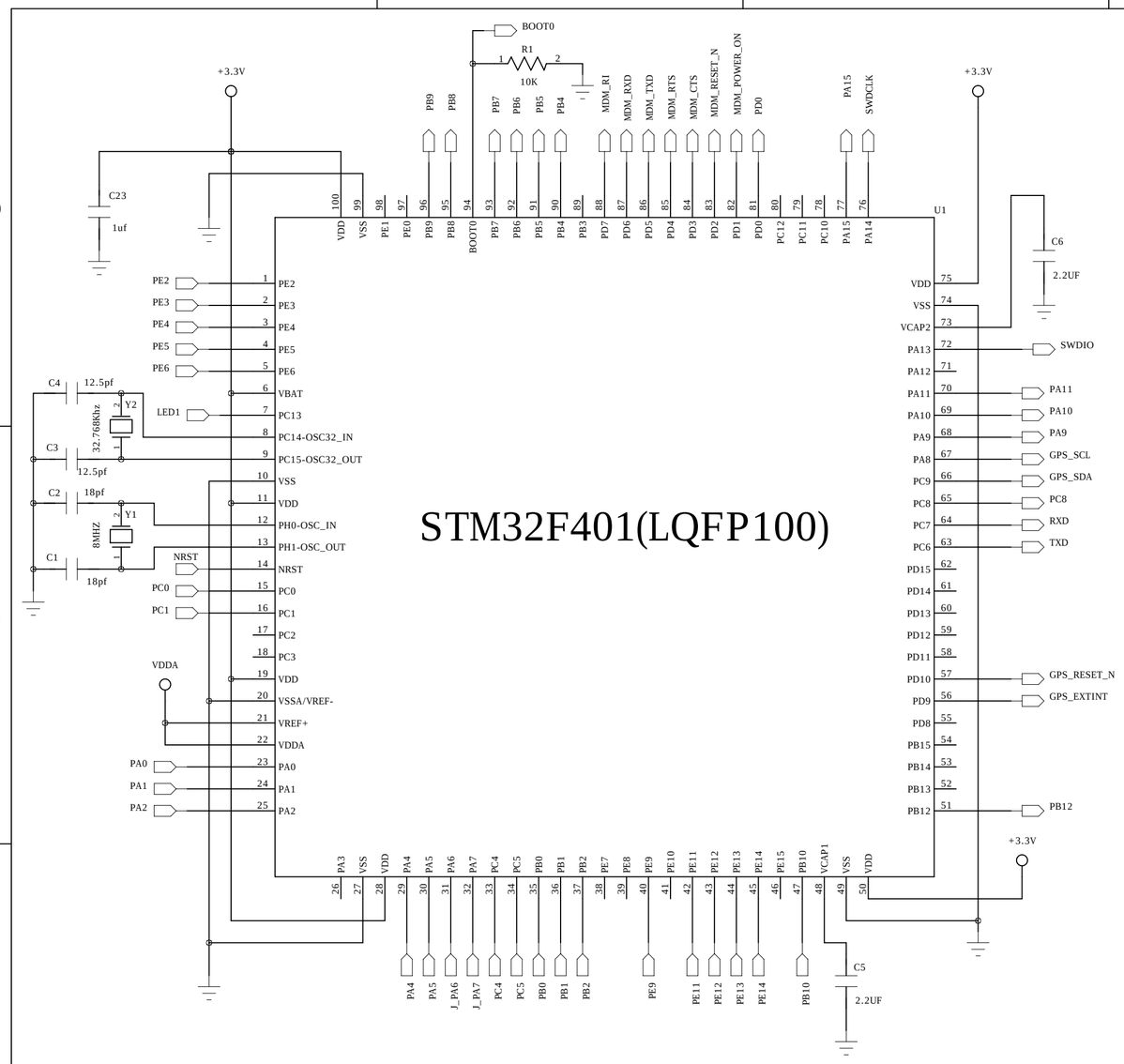


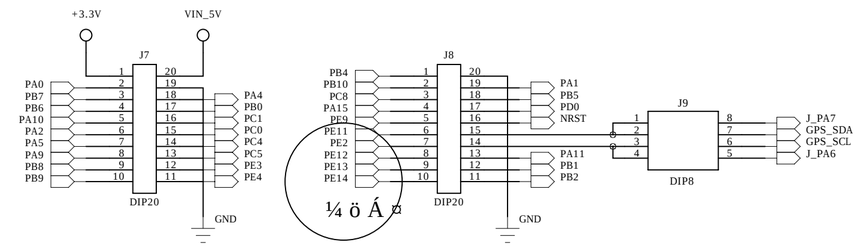


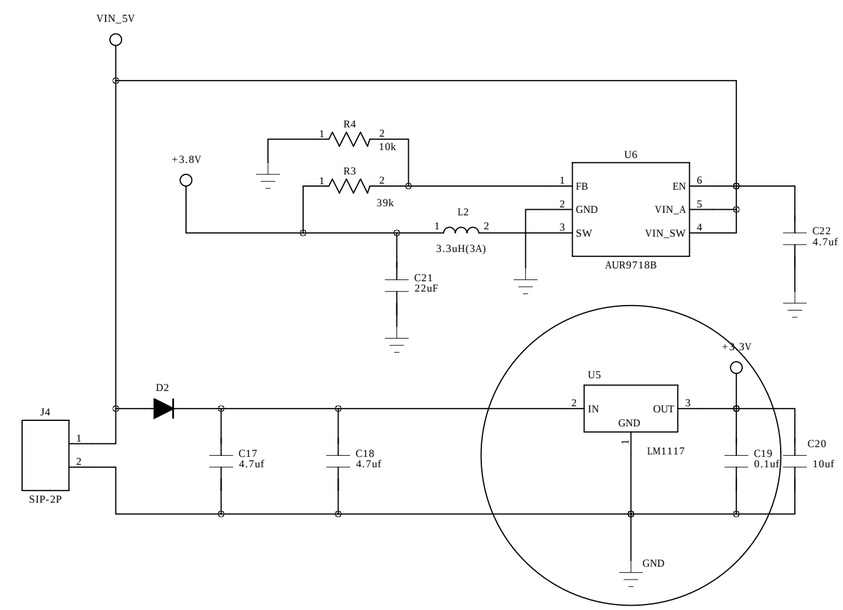


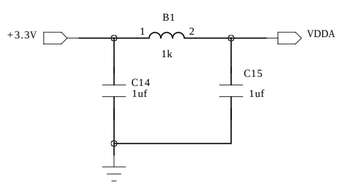


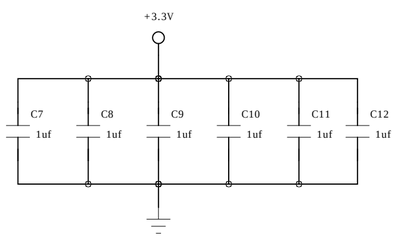


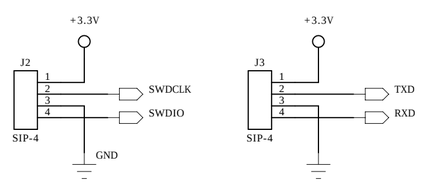


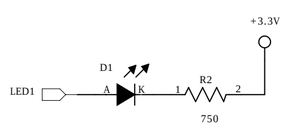


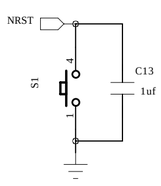


| | | | |
|---|---|---|---|
| COMPANY: | SIMENTECH-CODEZOO LINE | | |
| TITLE: | GPS_MODEM_SHIELD | | |
| DRAWN: KIM | DATED: 2016.02 | CODE: <Code> | SIZE: C |
| CHECKED: KIM | DATED: 2016.02 | DRAWING NO: 20160212 | REV: 0.9 |
| QUALITY CONTROL: KIM | DATED: 2016.02 | | |
| RELEASED: KIM | DATED: 2016.02 | SCALE: <Scale> | SHEET: 1 OF 3 |

| REVISION RECORD | | | |
|---|---|---|---|
| LTR | ECO NO: | APPROVED: | DATE: |
| | | | |
| | | | |
| | | | |
| | | | |

# SARA-G350(GMS)

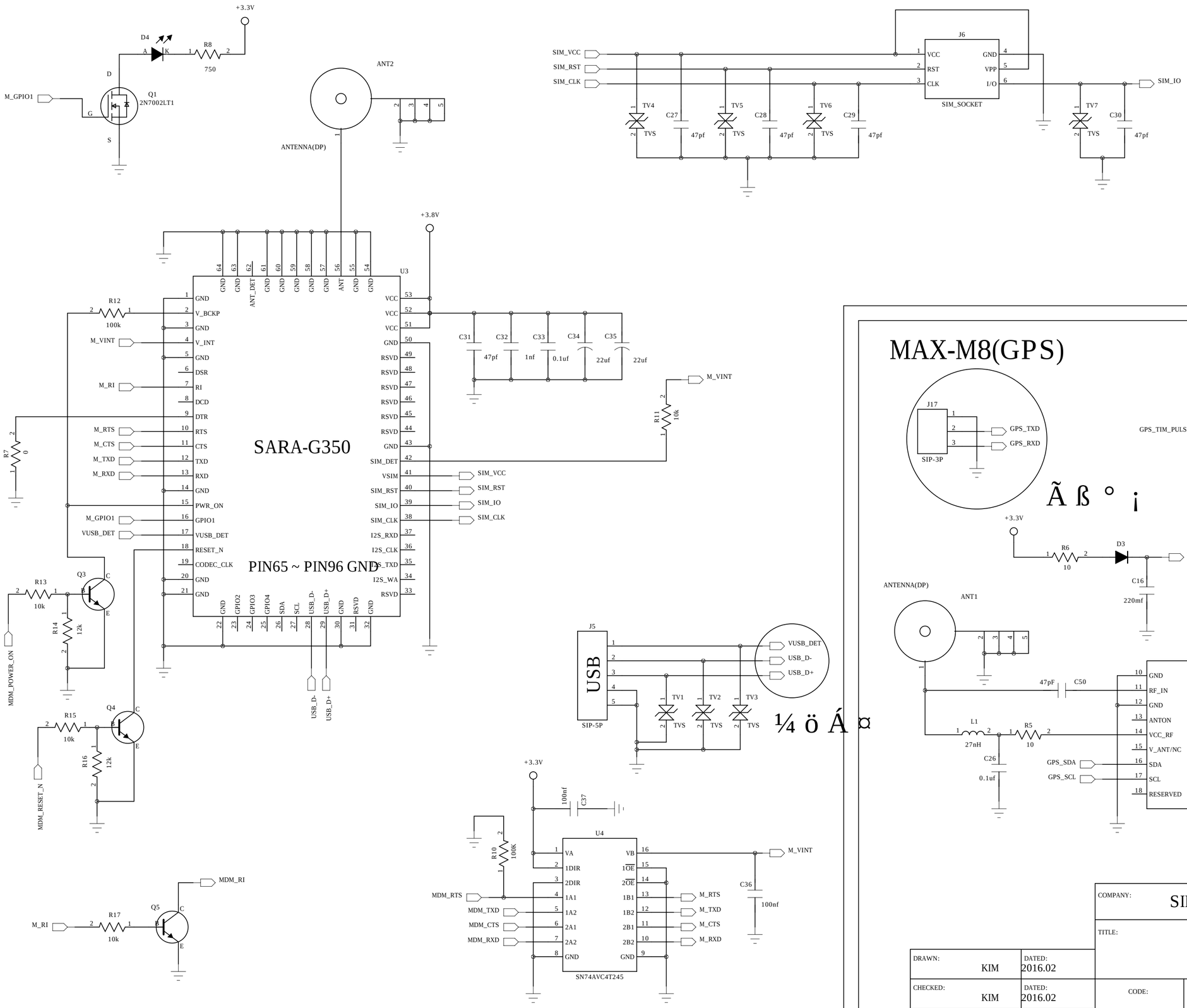


# MAX-M8(GPS)

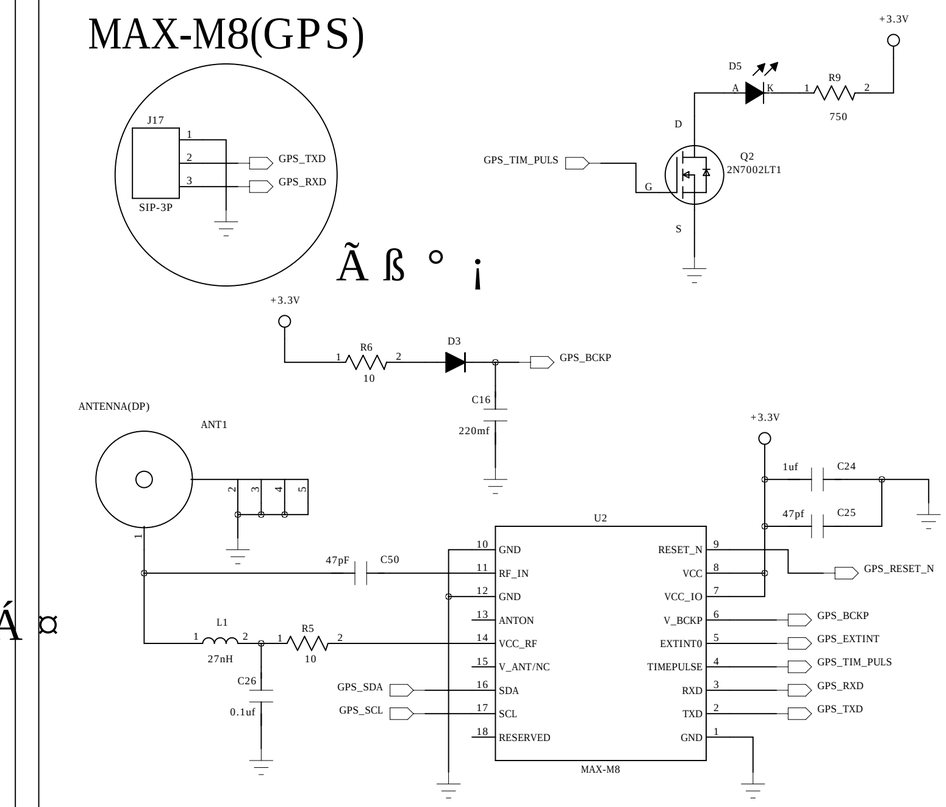


| | | | |
|---|---|---|---|
| COMPANY: | SIMENTECH-CODEZOO LINE | | |
| TITLE: | GPS_MODEM_SHIELD | | |
| DRAWN: KIM | DATED: 2016.02 | CODE: <Code> | SIZE: C |
| CHECKED: KIM | DATED: 2016.02 | DRAWING NO: 20160212 | REV: 0.9 |
| QUALITY CONTROL: KIM | DATED: 2016.02 | | |
| RELEASED: KIM | DATED: 2016.02 | SCALE: <Scale> | SHEET: 2 OF 3 |

| REVISION RECORD | | | |
|---|---|---|---|
| LTR | ECO NO: | APPROVED: | DATE: |
| | | | |
| | | | |
| | | | |
| | | | |

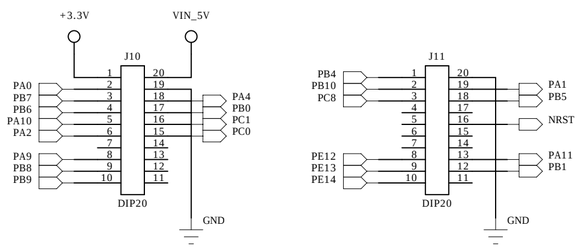


BOOST PACK

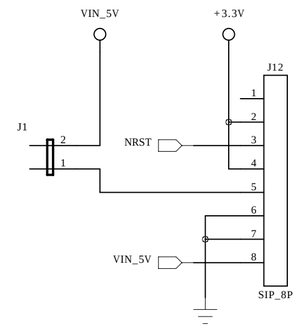


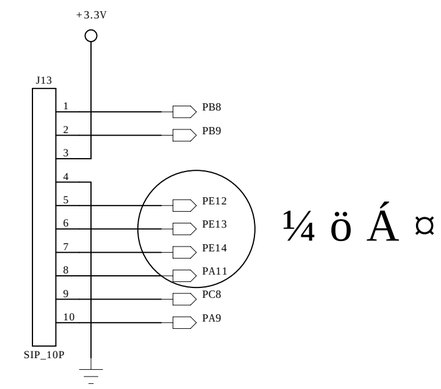


¼ ö Á ¤

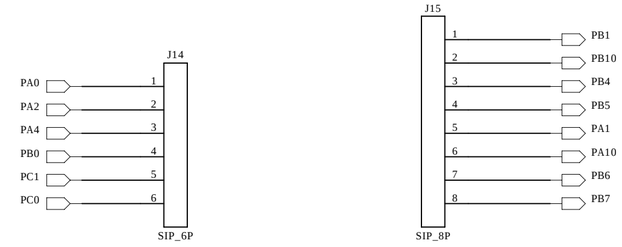


ARDUINO SHIELD

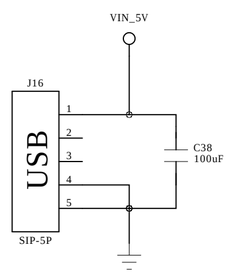


| | | | |
|---|---|---|---|
| COMPANY: SIMENTECH-CODEZOO LINE | | | |
| TITLE: GPS_MODEM_SHIELD | | | |
| CODE: <Code> | SIZE: C | DRAWING NO: 20160212 | REV: 0.9 |
| SCALE: <Scale> | | SHEET: 3 OF 3 | |

| | | | |
|---|---|---|---|
| DRAWN: | KIM | DATED: | 2016.02 |
| CHECKED: | KIM | DATED: | 2016.02 |
| QUALITY CONTROL: | KIM | DATED: | 2016.02 |
| RELEASED: | KIM | DATED: | 2016.02 |