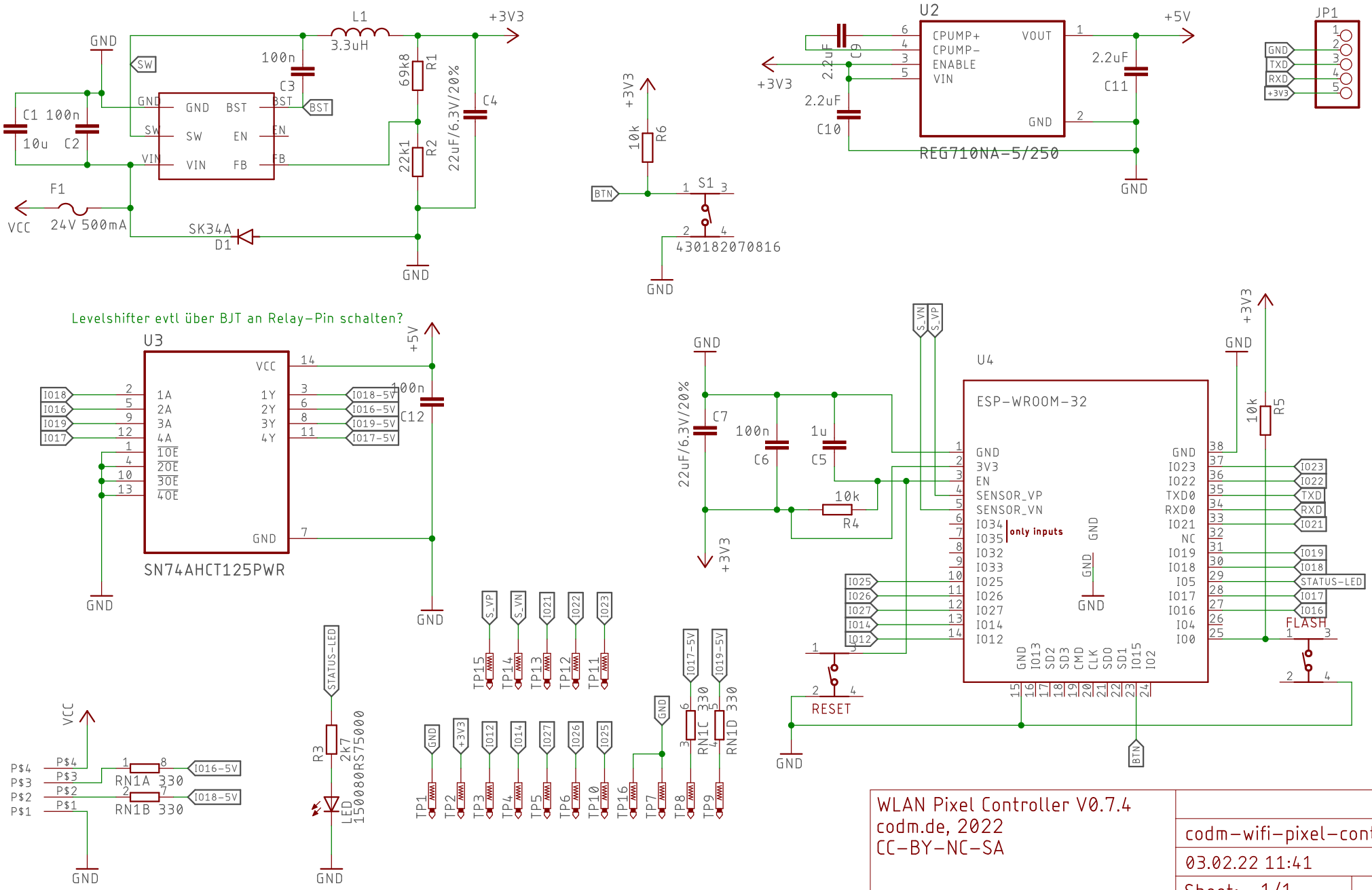

WLAN Pixel Controller V0.7.4
codm.de, 2022
CC-BY-NC-SA

codm-wifi-pixel-controller

03.02.22 11:41

Sheet: 1/1