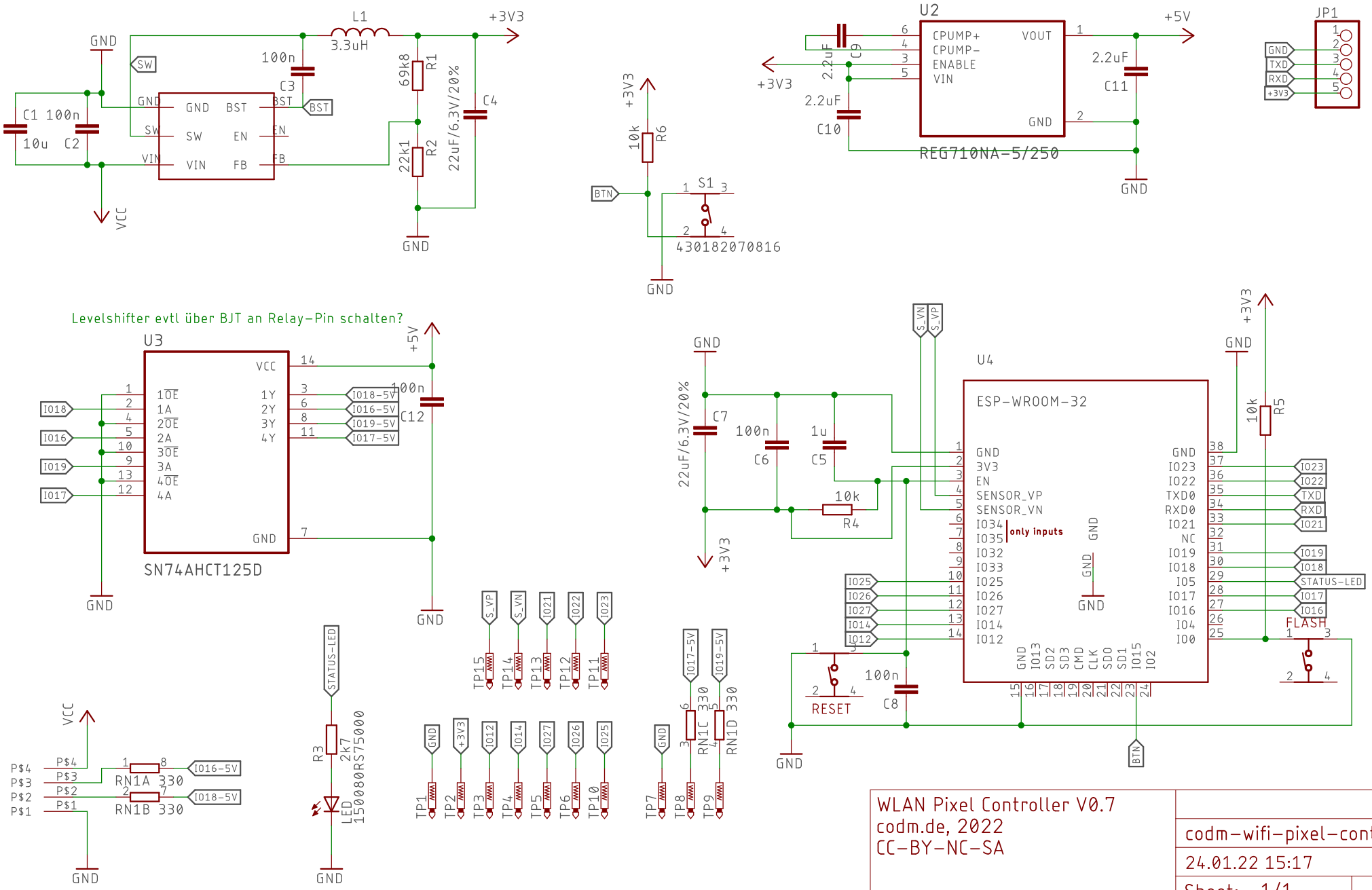

WLAN Pixel Controller V0.7
codm.de, 2022
CC-BY-NC-SA

codm-wifi-pixel-controller

24.01.22 15:17

Sheet: 1/1