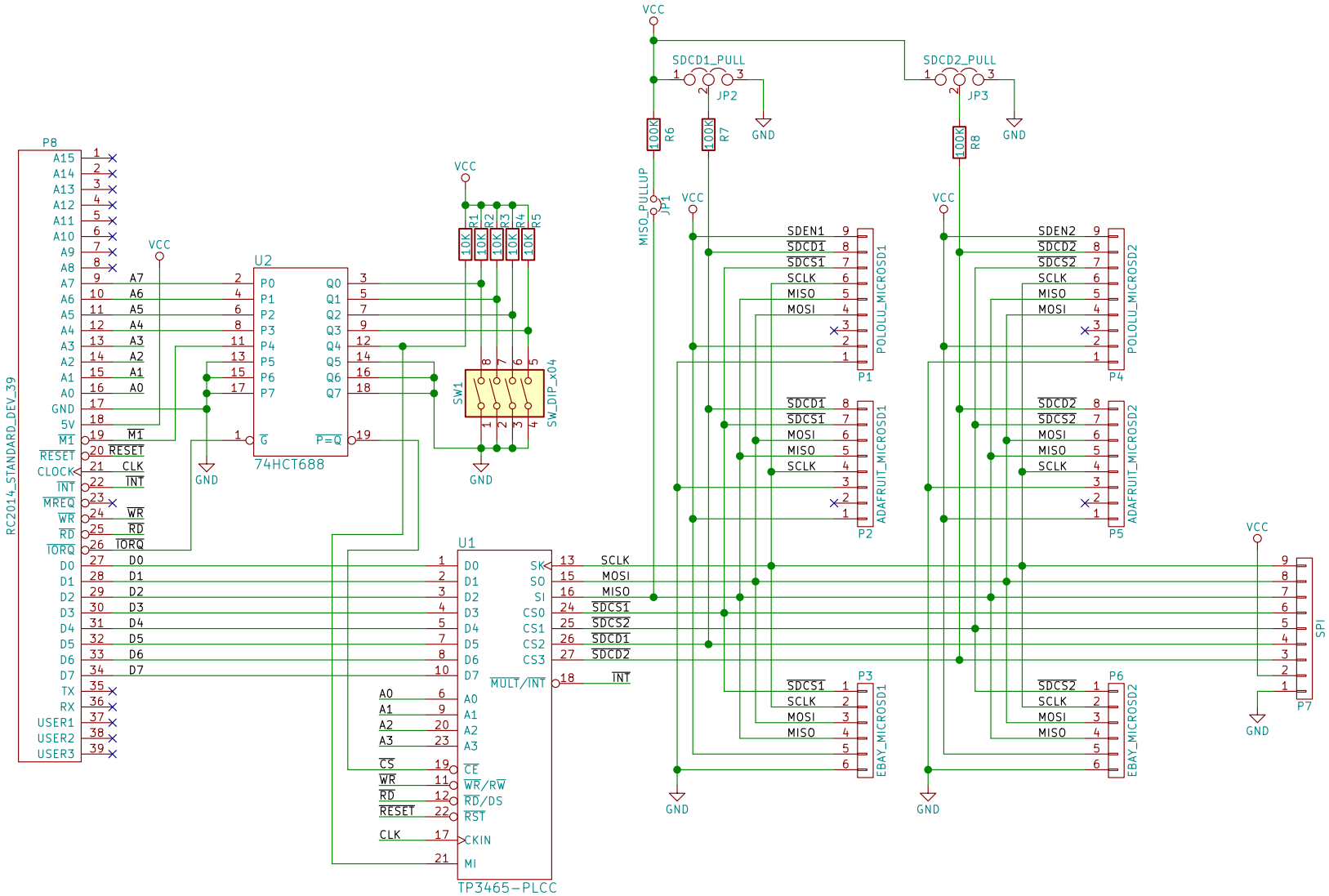

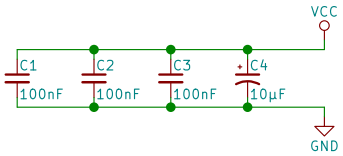

Microwire (SPI) Interface

Sheet: /
File: mid.sch

Title: RC2014 MID

Size: USLetter	Date: 2020-04-20	Rev:
KiCad E.D.A. kicad 4.0.5		Id: 1/1