VBUS detect cap
Remove R15
sda/scl on hub?

USB Controller Hub

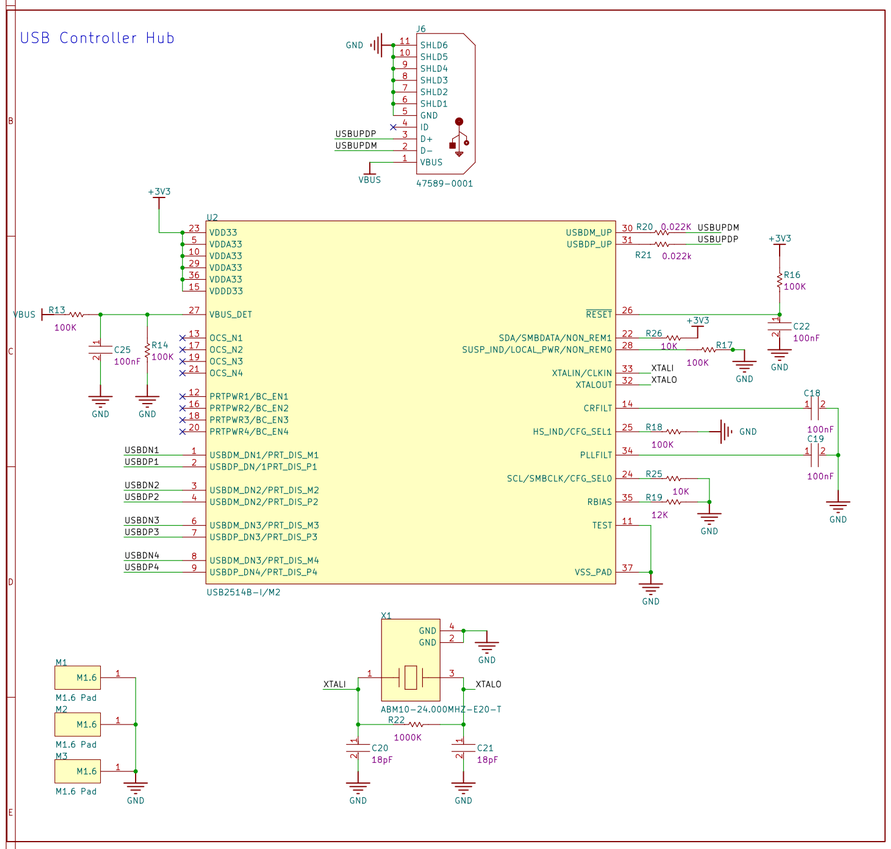

Stepper Driver 1

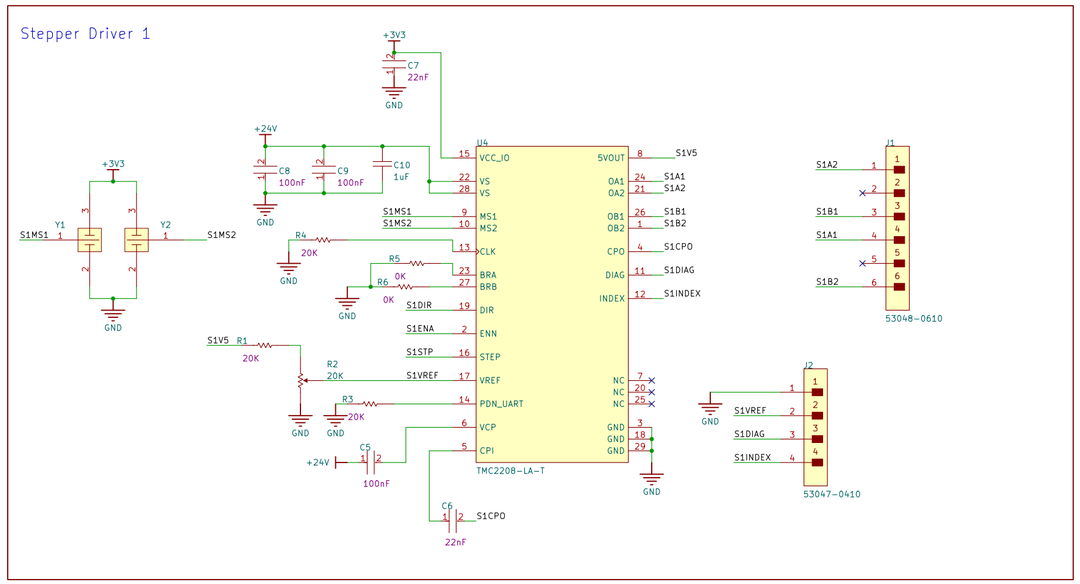

Teensy 4 w/ Serial Interface

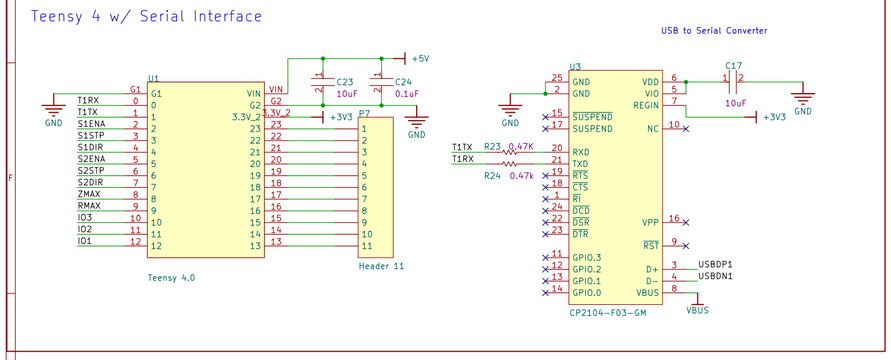

Stepper Driver 2

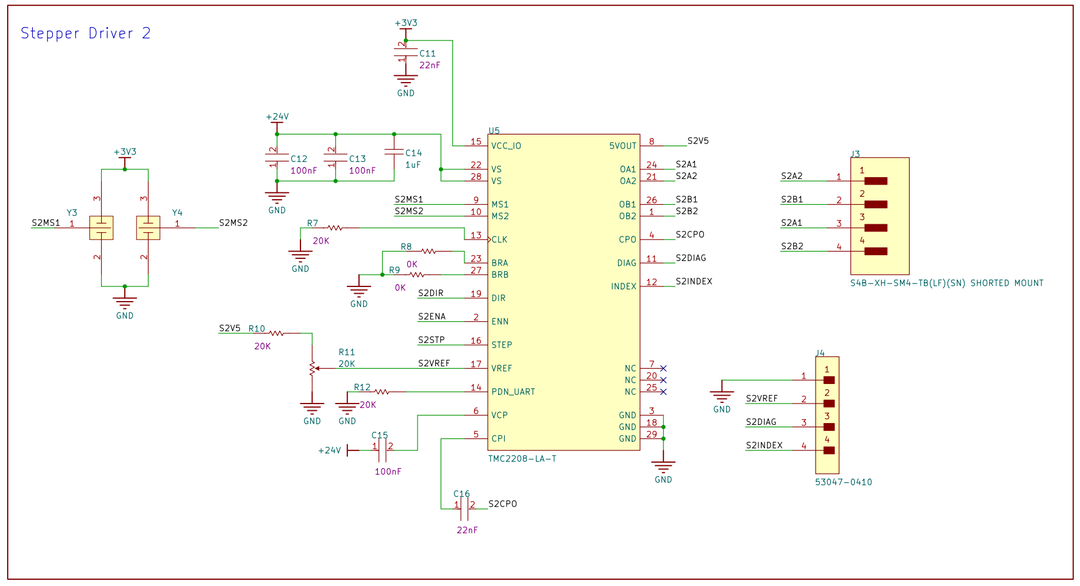

GPIO and USB

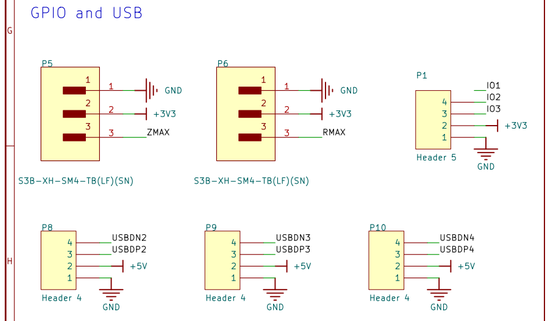

Power Input and Regulator

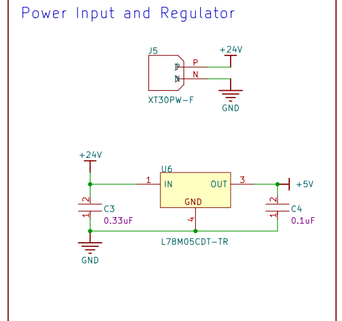

Sheet: /
File: DualMotorTeensy.kicad_sch

Title:

Size: C	Date:	Rev:
KiCad E.D.A. 9.0.1		Id: 1/1