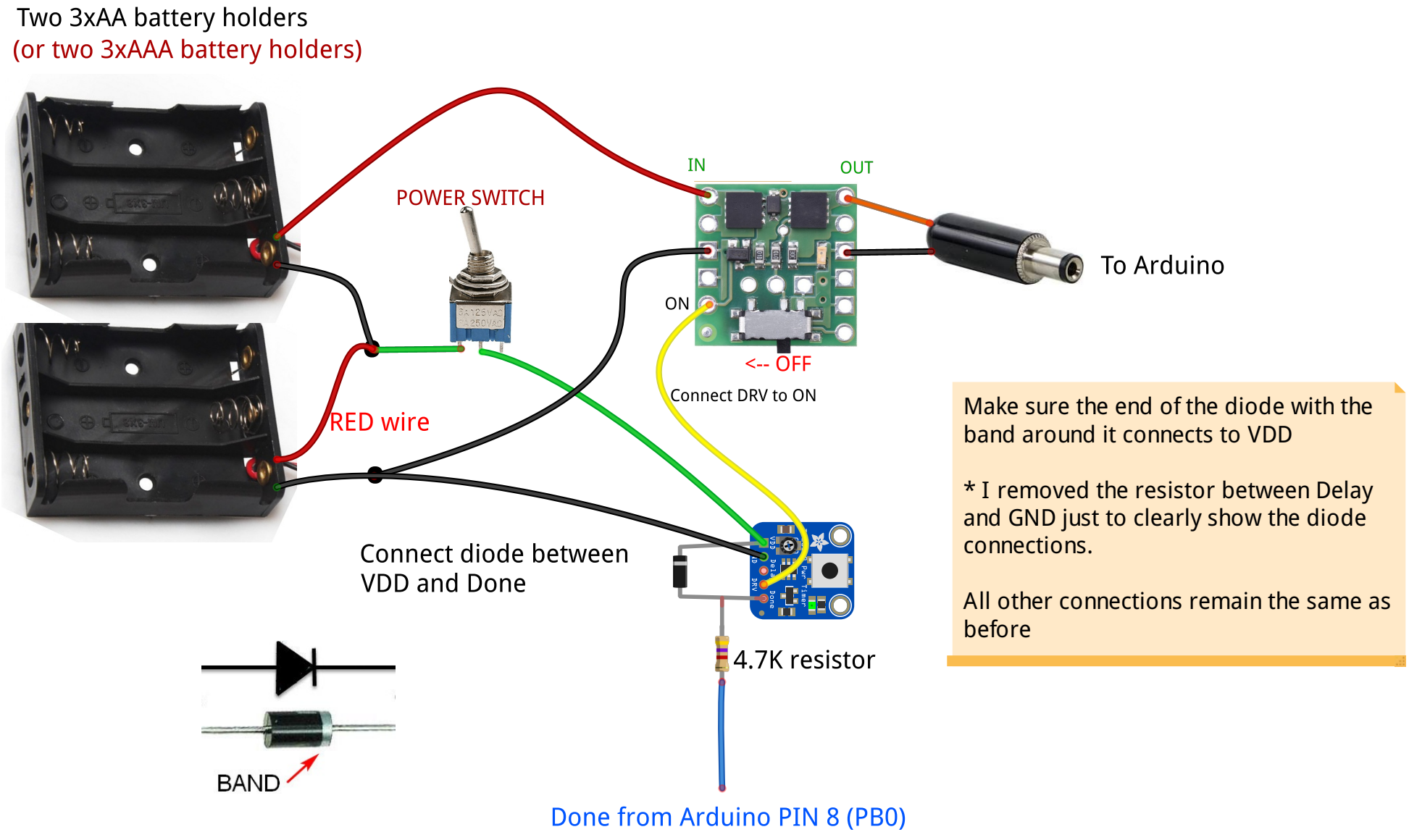
Two 3xAA battery holders
(or two 3xAAA battery holders)
POWER SWITCH
IN
OUT
To Arduino
ON
<-- OFF
Connect DRV to ON
RED wire
Connect diode between
VDD and Done
4.7K resistor
BAND
Done from Arduino PIN 8 (PB0)
Make sure the end of the diode with the band around it connects to VDD
* I removed the resistor between Delay and GND just to clearly show the diode connections.
All other connections remain the same as before