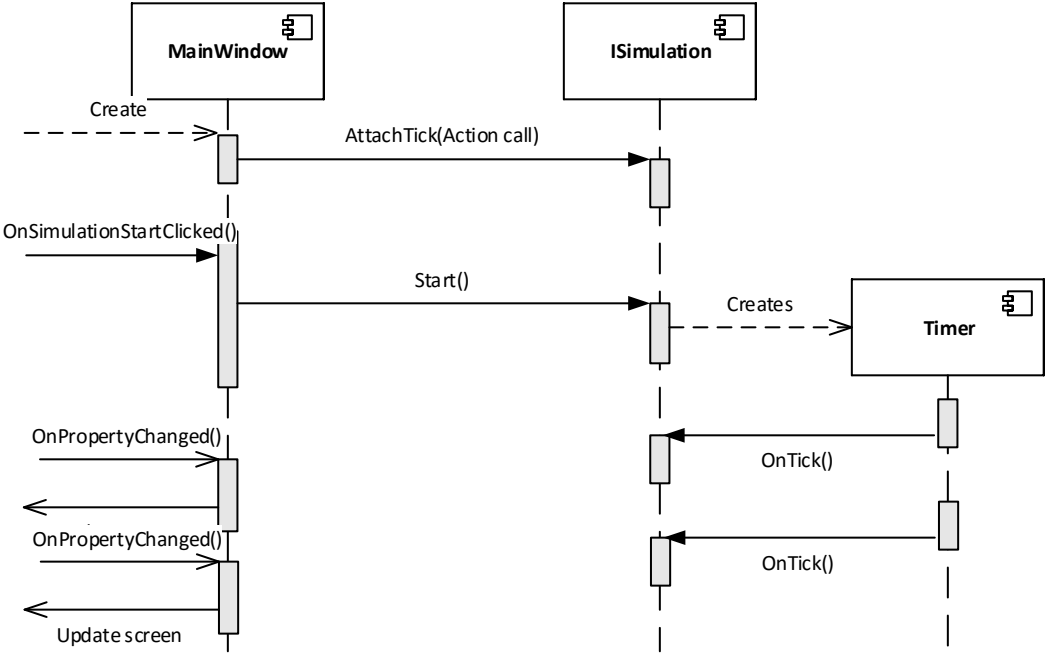
MainWindow
ISimulation
Create
AttachTick(Action call)
OnSimulationStartClicked()
Start()
Creates
Timer
OnPropertyChanged()
OnTick()
OnPropertyChanged()
OnTick()
Update screen