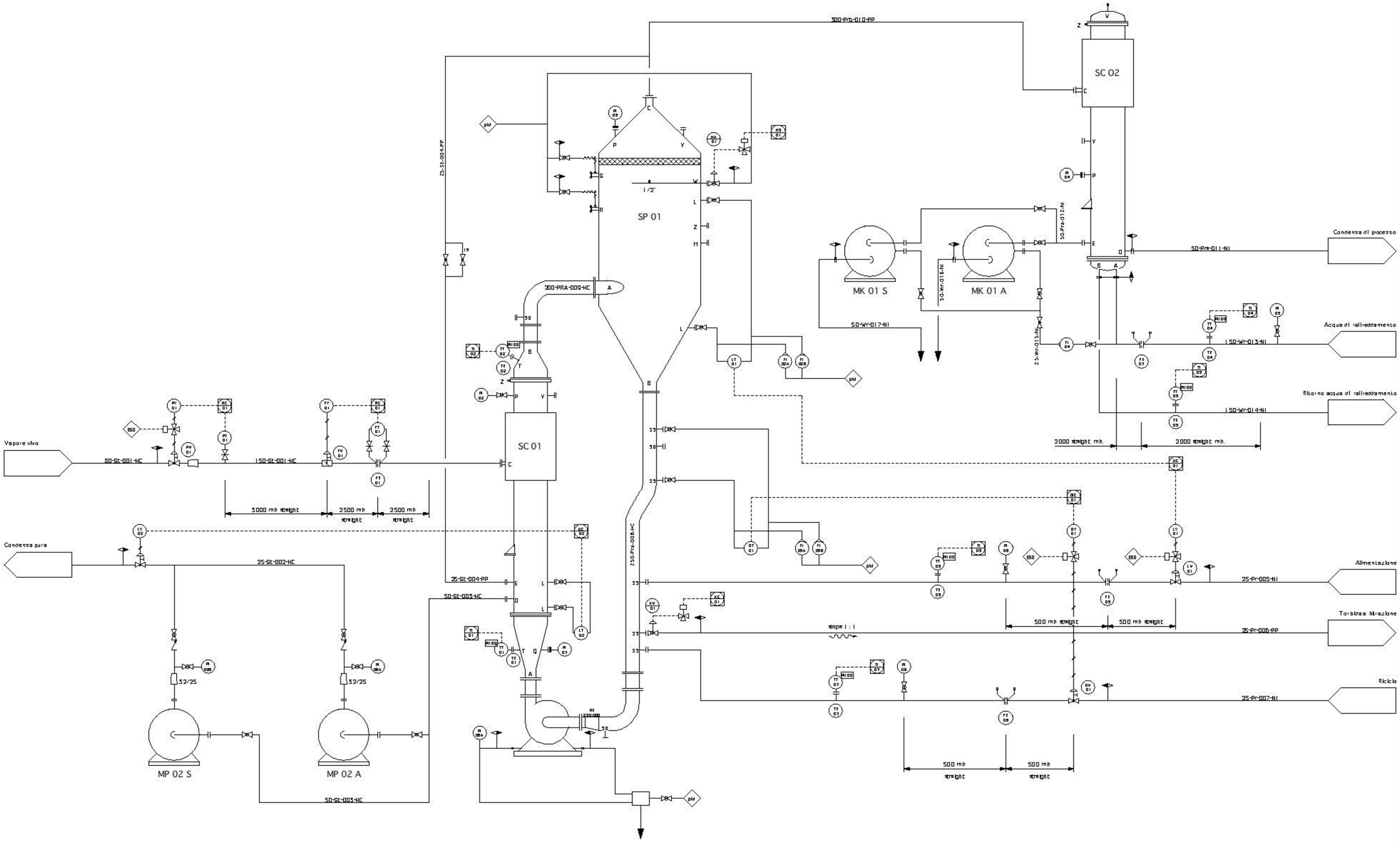

				Material	
				Dimensions	
				Tolerance	
				Scale	
A	Issue	2004 07 21 S.C.			
Appr.	Description	By	Appr.		

Bewdley Technical Services Limited

Alistair Chemicals

Cristallizzatore NaCl in NaClO
Schema meccanico

190A.1.002 A