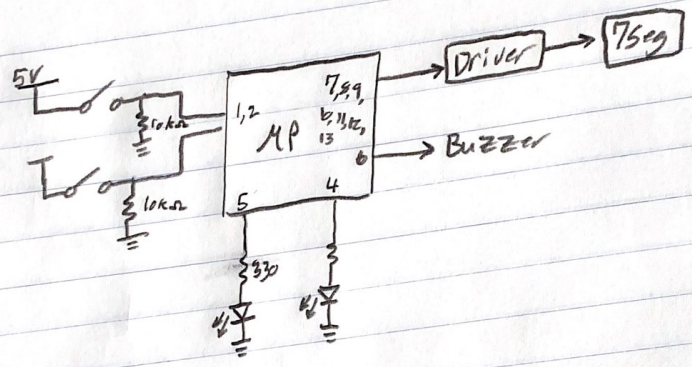
5V
10kΩ
10kΩ
1,2
μP
7,8,9,
10,11,12,
13
6
5
4
330
Driver
7seg
Buzzer

logic Flowchart

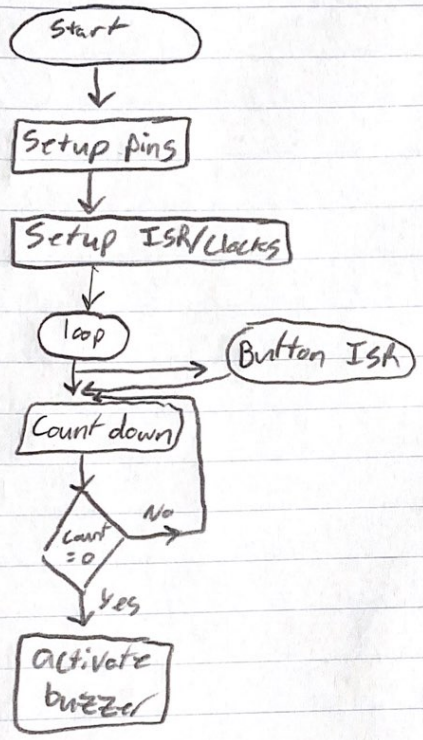

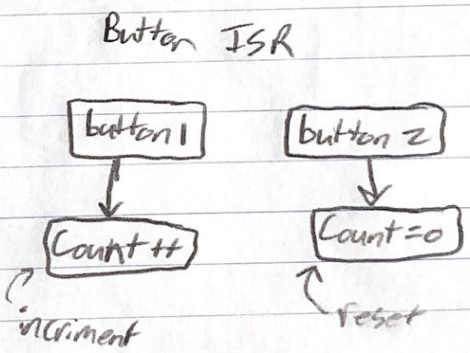

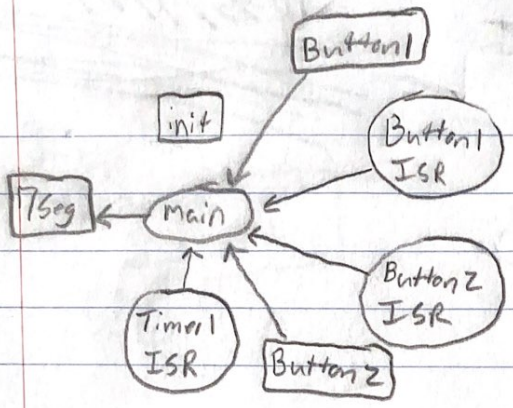
Button1
init
Button1 ISR
7seg
main
Button2 ISR
Timer1 ISR
Button2

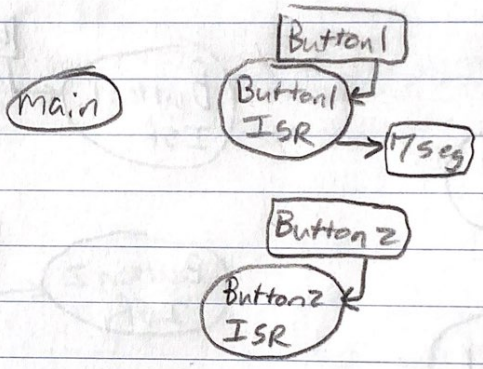
Button1
main
Button1 ISR
7seg
Button2
Button2 ISR