Rd = 4.2v / leakage of D1
= 84k (with 50uA leakage)

R1(max) = Vg * Rd / (4.2 - Vg)
= 0.5 * 84k / (4.2 - 0.5)
= 11k

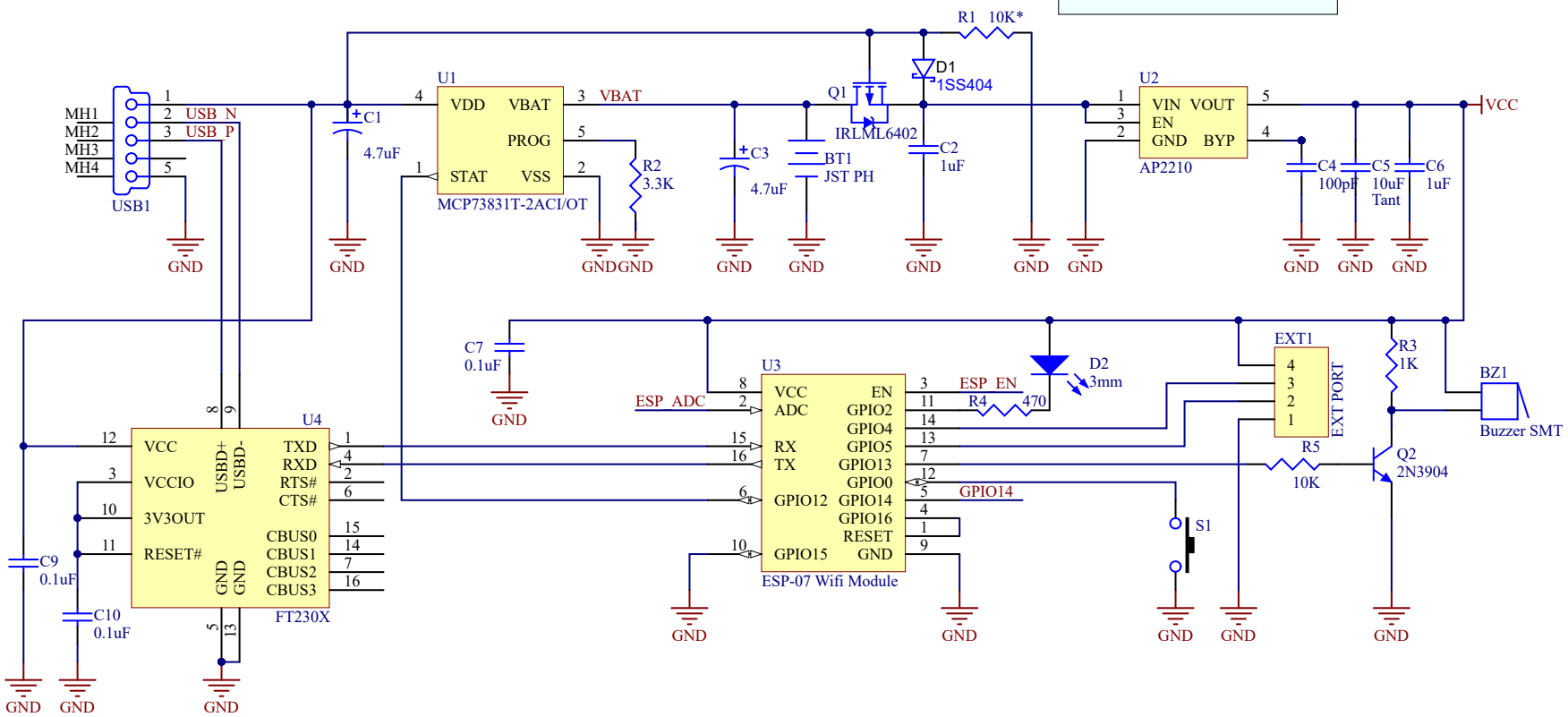

RESET INHIBITOR

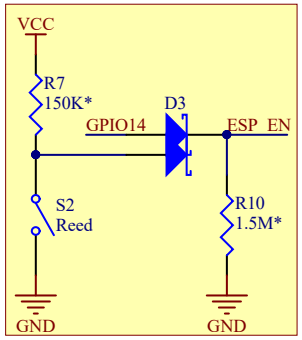

VOLTAGE MONITOR

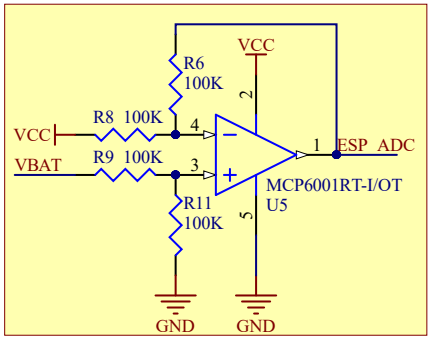

R7 = EN max pull-up
R10 = 10x R7

Increasing R7 can lead to instability but decreases current draw

Differential amplifier
Out = Vbat - Vcc
0.2v < Out < 0.9v

Title: Trinkets v1.0		
Size: A	Number	Revision: 4
Date: 3/26/2016		Sheet of
File: C:\Users\..\Schematic.SchDoc		Drawn By: Colin Iuliano