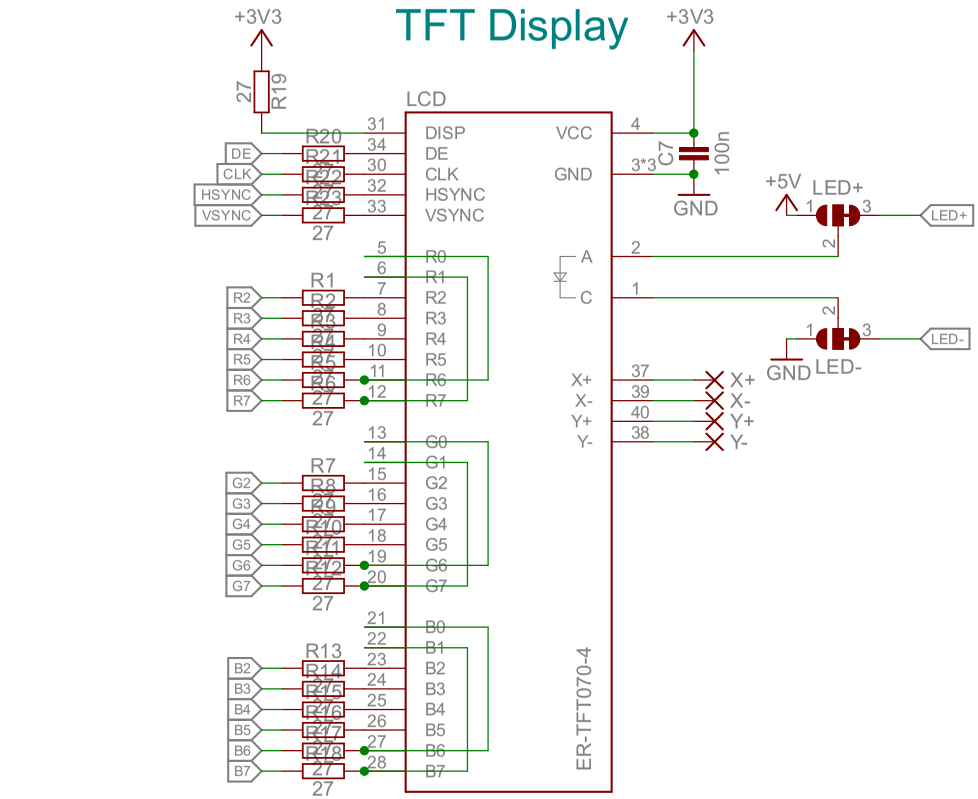

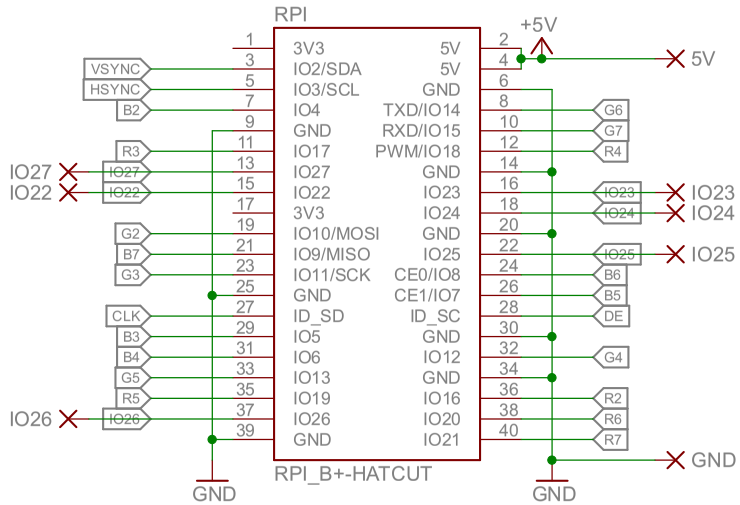

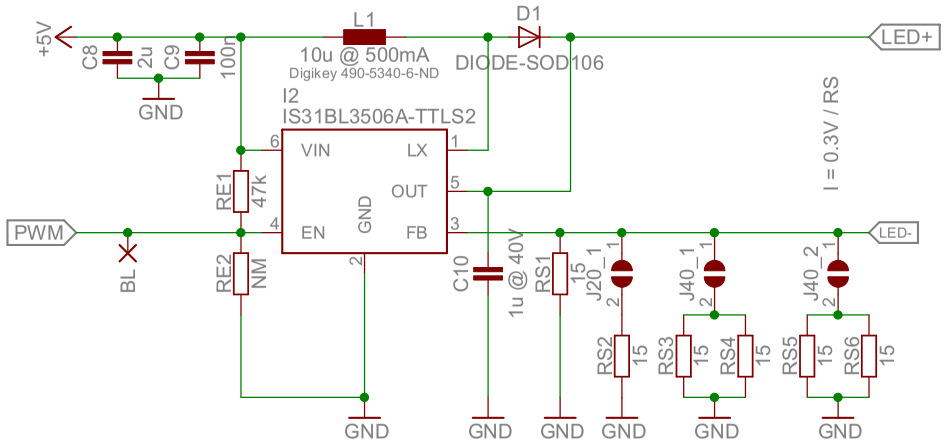

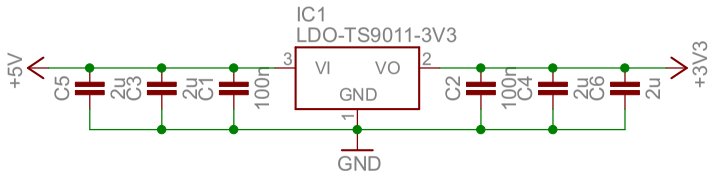

Released under the Creative Commons Attribution Share-Alike License
http://creativecommons.org/licenses/by-sa/4.0/

Designed by Andreas Watterott (Watterott electronic)
Inspired by the Adafruit Kippah design and infos from
Robert Ely - https://github.com/robertely/dpi666

Logo | OSHW LOGO | Logo

www.watterott.com

RPi-DPI-HAT_v10

28.05.2015 22:43:19

Sheet: 1/1

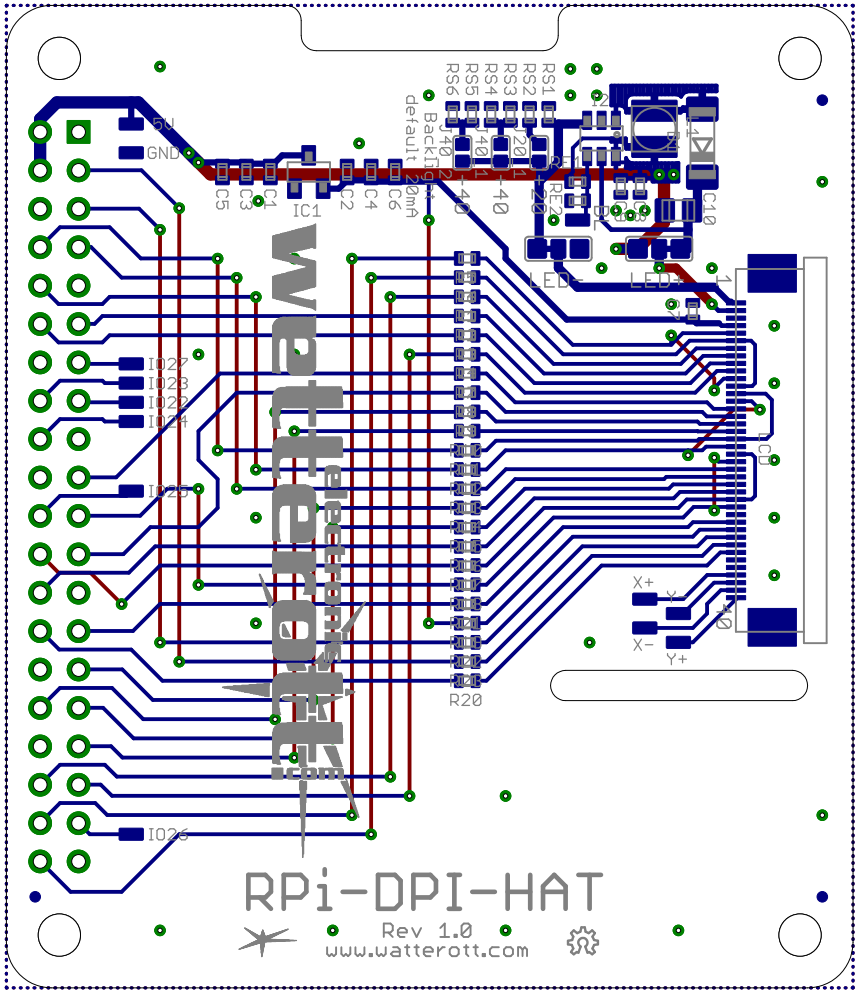
RPi-DPI-HAT
Rev 1.0
www.watterott.com
watterott
5V
GND
IO27
IO23
IO22
IO24
IO25
IO26
IC1
C1
C2
C3
C4
C5
C6
C10
RS1
RS2
RS3
RS4
RS5
RS6
R20
LED-
LED+
X+
X-
Y+
Y-
DCD