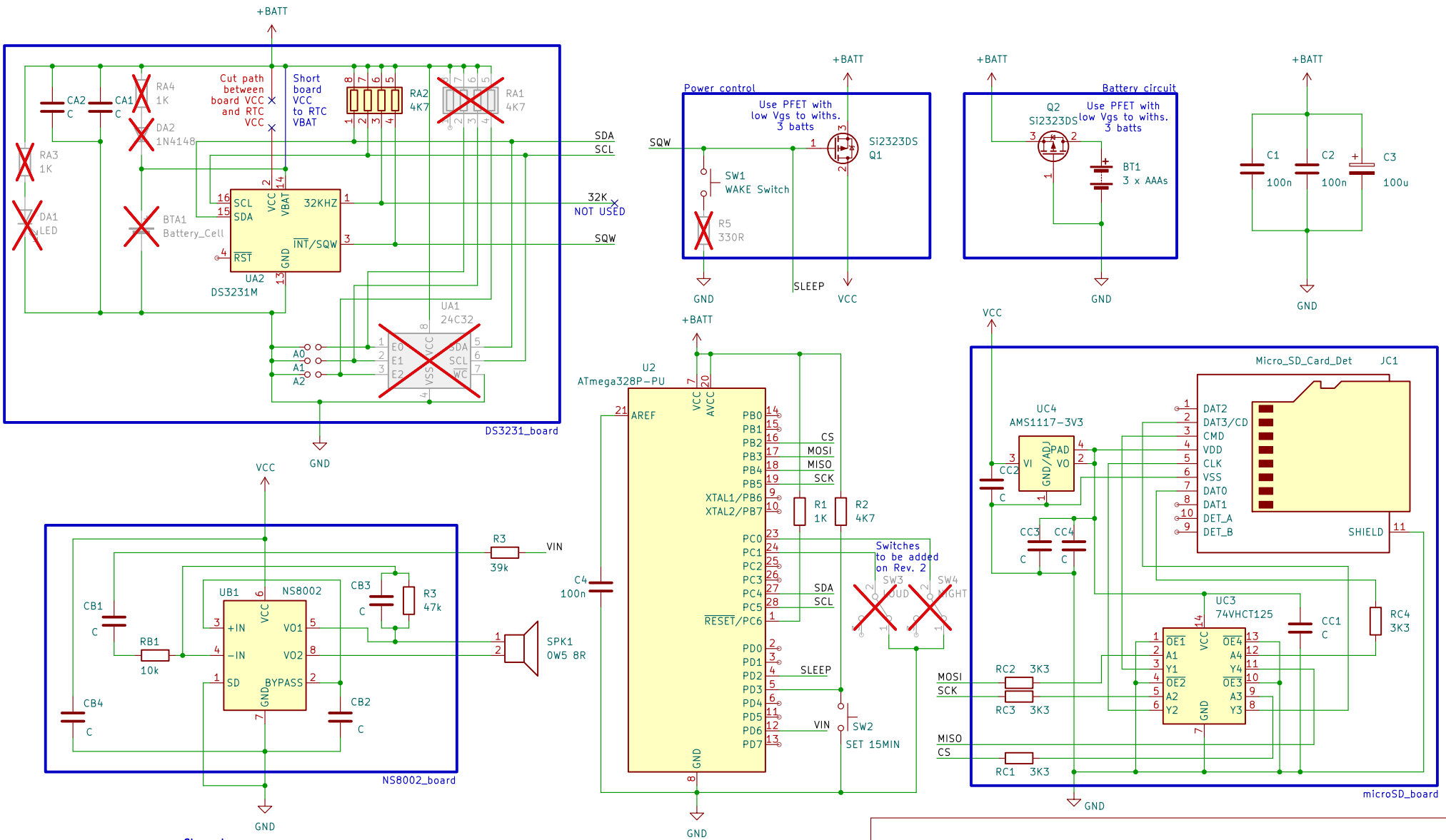


**Changelog**

| dd.mm.yyyy | Version/Revision |
|---|---|
| 03.02.2024 | Rev. 0: preliminar version, with ICSP/Serial ifcs. |
| 25.03.2024 | Rev. 1: first full version:<br>– ATMega always on<br>– DS3231 board modified to minimize consumption<br>– Diagram polishing |
| 23.08.2024 | Rev. 1b: swapped from LM386 to NS8002 daughter board. |

**Translation table**

| Daughter board | Schematic ID | Daughter board ID |
|---|---|---|
| DS3231_board | BTAx, CAx, DAx, RAx, UAx | BTx, Cx, Dx, Rx, Ux |
| NS8002_board | CBx, RBx, UBx | Cx, Rx, Ux |
| microSD_board | CCx, JCx, RCx, UCx | Cx, Jx, Rx, Ux |

Loosely based on "http://www.gammon.com.au/forum/?id=12106" and "http://gammon.com.au/images/Arduino/HHS_Temperature_Logger1.png"

Sheet: /
File: kicadproj.kicad_sch

**Title: Seikosha80 Westminster Chimer**

| Size: A4 | Date: | Rev: 1b |
|---|---|---|
| KiCad E.D.A. 8.0.1 | | Id: 1/1 |