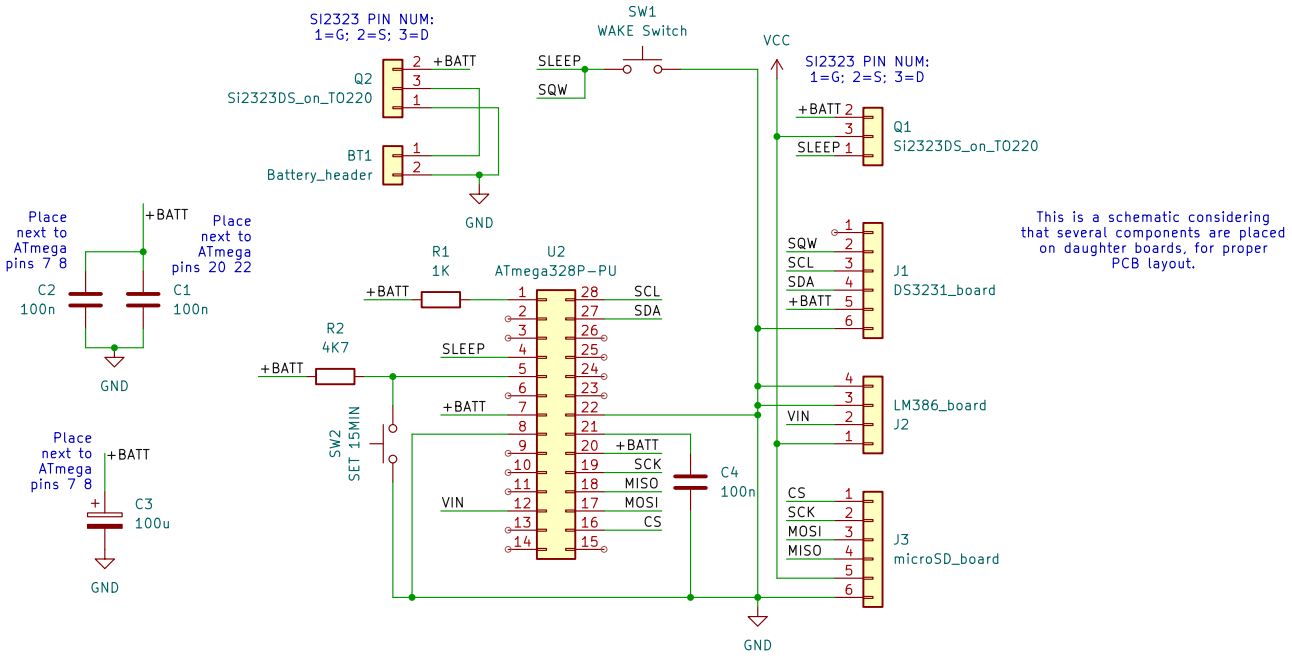

See
https://github.com/comododragon/seikosha80/blob/main/schematics_layouts/rev1
/kicadproj/output.pdf for discrete schematic

Sheet: /
File: kicadproj.kicad_sch

Title: Seikosha80 Westminster Chimer

Size: A4	Date:	**Rev: 1**
KiCad E.D.A. 8.0.1		Id: 1/1