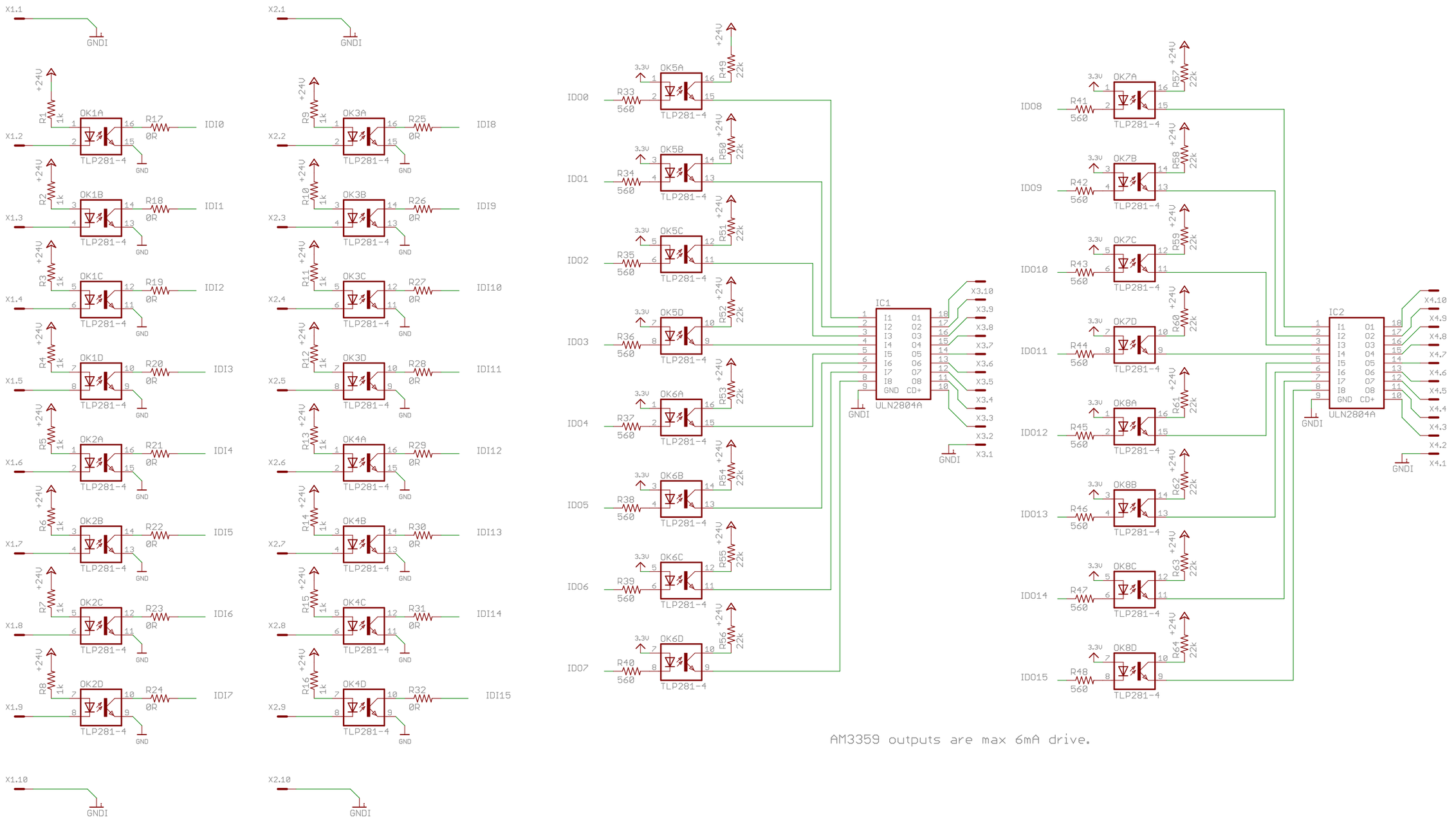

TITLE: BB_DIO_Cape	
Document Number:	REV:
Date: 3/4/2014 10:42:10 AM	Sheet: 1/2

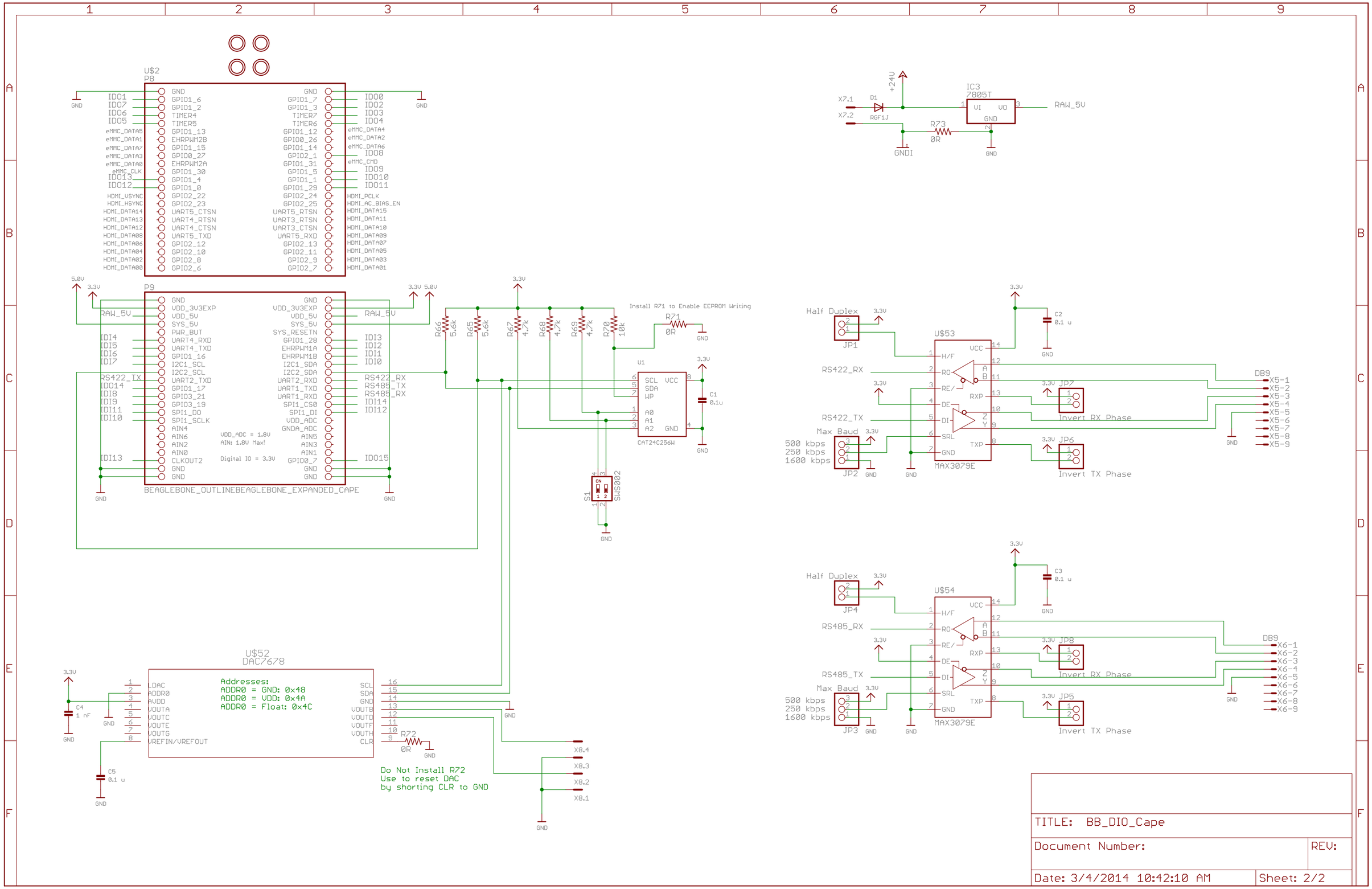
U$2
P8
P9
BEAGLEBONE_OUTLINEBEAGLEBONE_EXPANDED_CAPE
VDD_ADC = 1.8V
AIN: 1.8V Max!
Digital IO = 3.3V
U$52
DAC7678
Addresses:
ADDR0 = GND: 0x48
ADDR0 = VDD: 0x4A
ADDR0 = Float: 0x4C
Do Not Install R72
Use to reset DAC
by shorting CLR to GND
Install R71 to Enable EEPROM Writing
U1
CAT24C256W
S1
SWS002
IC3
7805T
RAW_5V
GNDI
Half Duplex
JP1
U$53
MAX3079E
RS422_RX
RS422_TX
Max Baud
500 kbps
250 kbps
1600 kbps
JP2
JP7
JP6
Invert RX Phase
Invert TX Phase
DB9
Half Duplex
JP4
U$54
MAX3079E
RS485_RX
RS485_TX
JP3
JP8
JP5
Invert RX Phase
Invert TX Phase
DB9
TITLE: BB_DIO_Cape
Document Number:
REV:
Date: 3/4/2014 10:42:10 AM
Sheet: 2/2