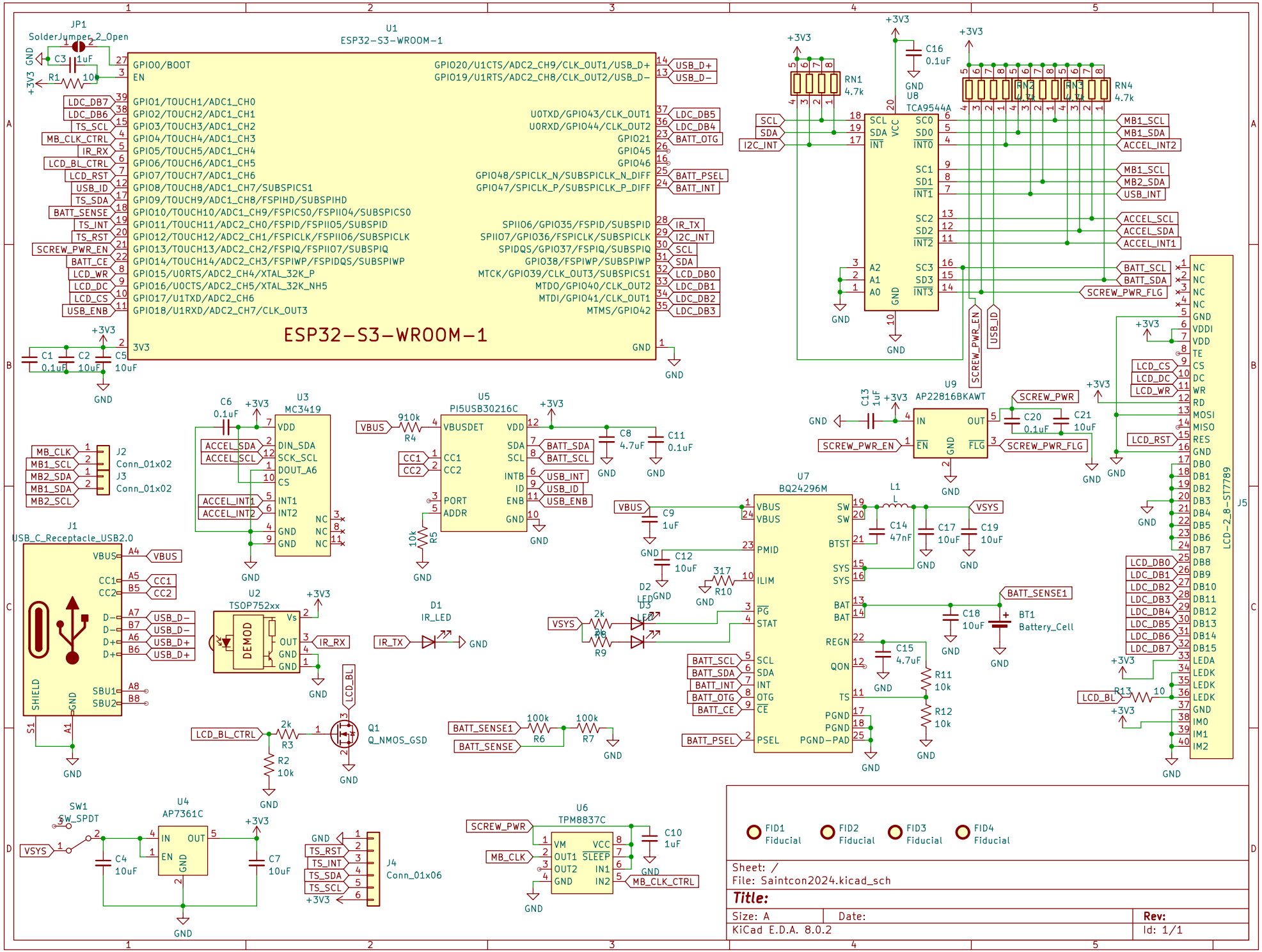
U1
ESP32-S3-WROOM-1
ESP32-S3-WROOM-1
GPIO0/BOOT
EN
GPIO1/TOUCH1/ADC1_CH0
GPIO2/TOUCH2/ADC1_CH1
GPIO3/TOUCH3/ADC1_CH2
GPIO4/TOUCH4/ADC1_CH3
GPIO5/TOUCH5/ADC1_CH4
GPIO6/TOUCH6/ADC1_CH5
GPIO7/TOUCH7/ADC1_CH6
GPIO8/TOUCH8/ADC1_CH7/SUBSPICS1
GPIO9/TOUCH9/ADC1_CH8/FSPIHD/SUBSPIHD
GPIO10/TOUCH10/ADC1_CH9/FSPICS0/FSPIIO4/SUBSPICS0
GPIO11/TOUCH11/ADC2_CH0/FSPID/FSPIIO5/SUBSPID
GPIO12/TOUCH12/ADC2_CH1/FSPICLK/FSPIIO6/SUBSPICLK
GPIO13/TOUCH13/ADC2_CH2/FSPIQ/FSPIIO7/SUBSPIQ
GPIO14/TOUCH14/ADC2_CH3/FSPIWP/FSPIDQS/SUBSPIWP
GPIO15/U0RTS/ADC2_CH4/XTAL_32K_P
GPIO16/U0CTS/ADC2_CH5/XTAL_32K_NH5
GPIO17/U1TXD/ADC2_CH6
GPIO18/U1RXD/ADC2_CH7/CLK_OUT3
GPIO20/U1CTS/ADC2_CH9/CLK_OUT1/USB_D+
GPIO19/U1RTS/ADC2_CH8/CLK_OUT2/USB_D-
U0TXD/GPIO43/CLK_OUT1
U0RXD/GPIO44/CLK_OUT2
GPIO21
GPIO45
GPIO46
GPIO48/SPICLK_N/SUBSPICLK_N_DIFF
GPIO47/SPICLK_P/SUBSPICLK_P_DIFF
SPIIO6/GPIO35/FSPID/SUBSPID
SPIIO7/GPIO36/FSPICLK/SUBSPICLK
SPIDQS/GPIO37/FSPIQ/SUBSPIQ
GPIO38/FSPIWP/SUBSPIWP
MTCK/GPIO39/CLK_OUT3/SUBSPICS1
MTDO/GPIO40/CLK_OUT2
MTDI/GPIO41/CLK_OUT1
MTMS/GPIO42
3V3
GND
JP1
SolderJumper_2_Open
C3 1uF
R1 10
C1 0.1uF
C2 10uF
C5 10uF
U8
TCA9544A
RN1 4.7k
RN2 4.7k
RN3 4.7k
RN4 4.7k
C16 0.1uF
U9
AP22816BKAWT
C13 1uF
C20 0.1uF
C21 10uF
U3
MC3419
C6 0.1uF
U5
PI5USB30216C
R4 910k
C8 4.7uF
C11 0.1uF
R5 10k
J2
Conn_01x02
J3
Conn_01x02
J1
USB_C_Receptacle_USB2.0
U2
TSOP752xx
D1
IR_LED
U7
BQ24296M
L1
C9 1uF
C12 10uF
R10 317
D2 LED
D3 LED
R9 2k
C14 47nF
C17 10uF
C19 10uF
C18 10uF
BT1
Battery_Cell
C15 4.7uF
R11 10k
R12 10k
Q1
Q_NMOS_GSD
R3 2k
R2 10k
R6 100k
R7 100k
SW1
SW_SPDT
U4
AP7361C
C4 10uF
C7 10uF
J4
Conn_01x06
U6
TPM8837C
C10 1uF
J5
LCD-2.8-ST7789
R13 10
FID1 Fiducial
FID2 Fiducial
FID3 Fiducial
FID4 Fiducial
Sheet: /
File: Saintcon2024.kicad_sch
Title:
Size: A
Date:
Rev:
KiCad E.D.A. 8.0.2
Id: 1/1