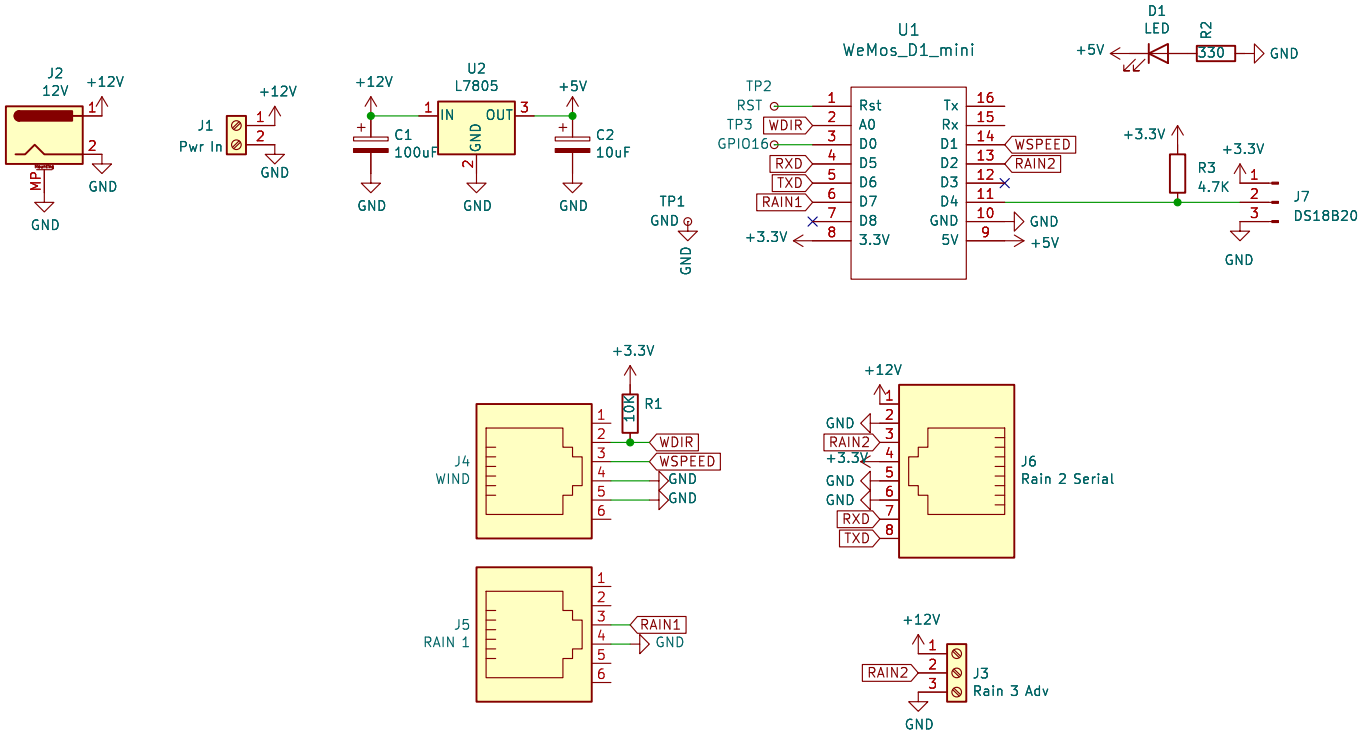

H1 MountingHole
H2 MountingHole
H3 MountingHole
H4 MountingHole

Scott Hanson

Sheet: /
File: Weather_Wemos.kicad_sch

Title: Weather Wemos

Size: A4	Date: 2023-02-26	**Rev: v3**
KiCad E.D.A. kicad (7.0.0)		Id: 1/1