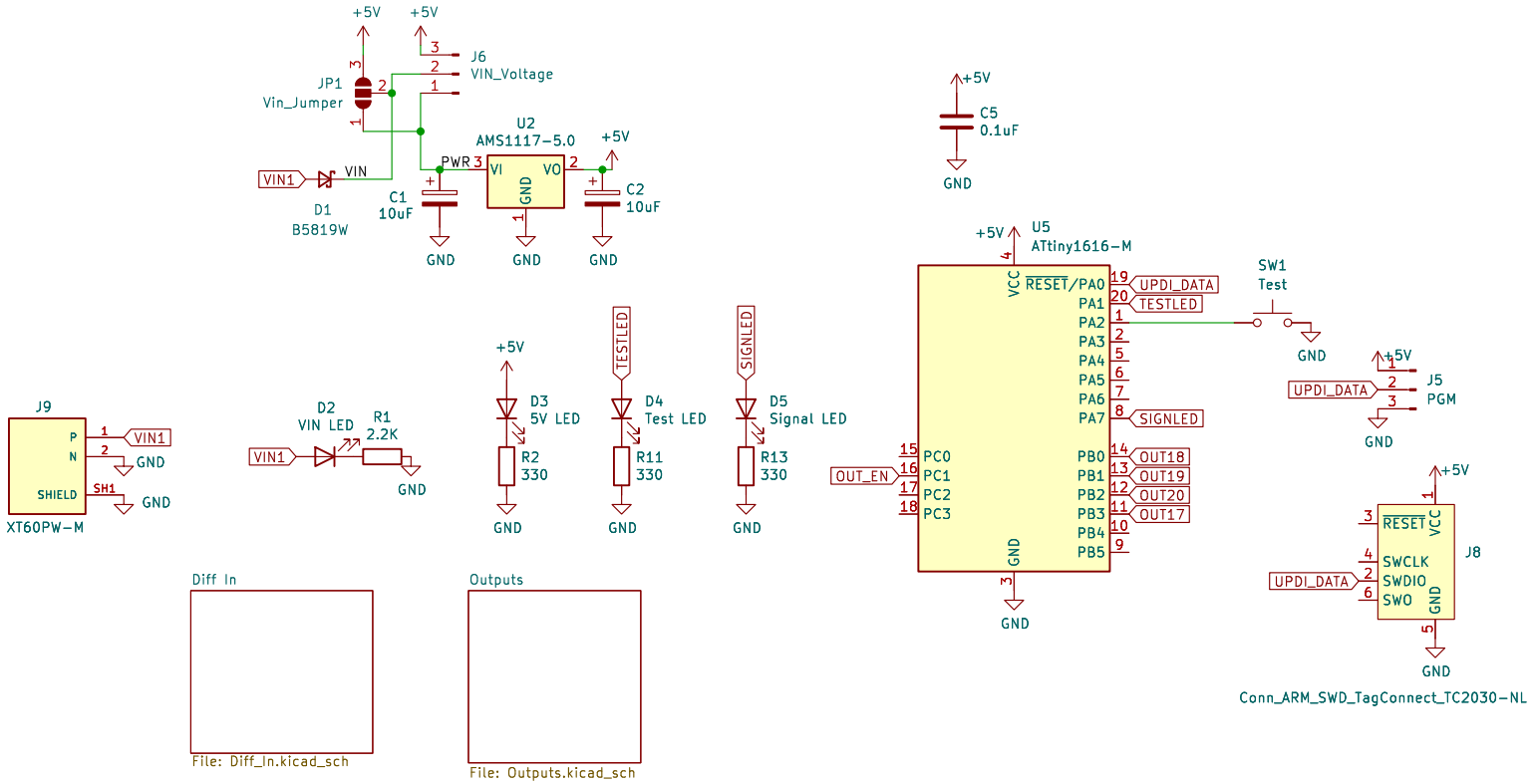

Scott Hanson

Sheet: /

File: Receiver_Out.kicad_sch

Title: Receiver Out Edge

Size: A4	Date: 2026-02-22	**Rev: v1**
KiCad E.D.A. 9.0.7		Id: 1/3

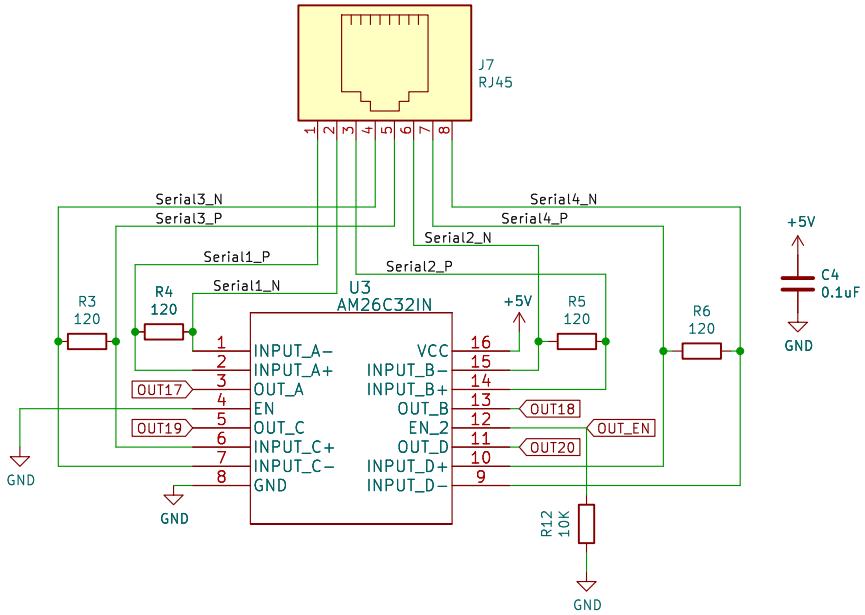

Scott Hanson

Sheet: /Diff In/
File: Diff_In.kicad_sch

Title: Receiver Out Edge

Size: A4	Date: 2026-02-22	**Rev: v1**
KiCad E.D.A. 9.0.7		Id: 2/3

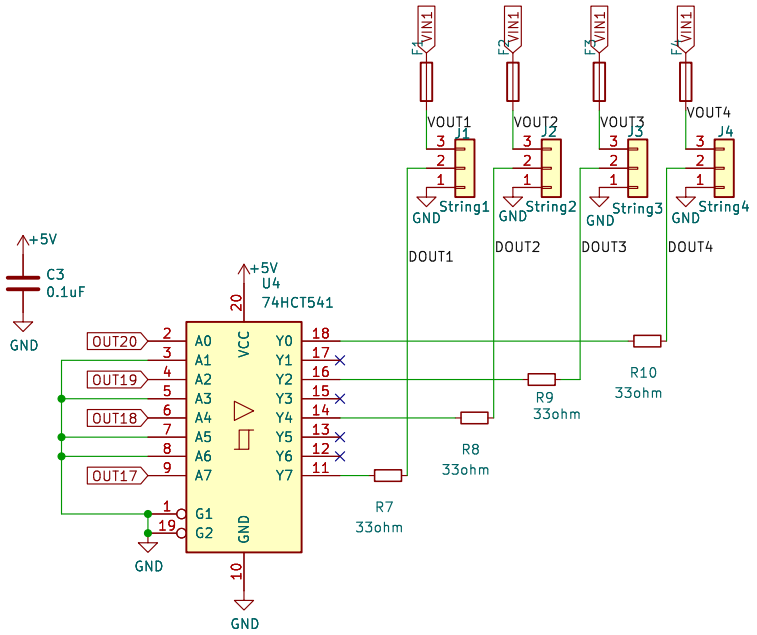

Scott Hanson

Sheet: /Outputs/
File: Outputs.kicad_sch

Title: Receiver Out Edge

Size: A4	Date: 2026-02-22	**Rev: v1**
KiCad E.D.A. 9.0.7		Id: 3/3