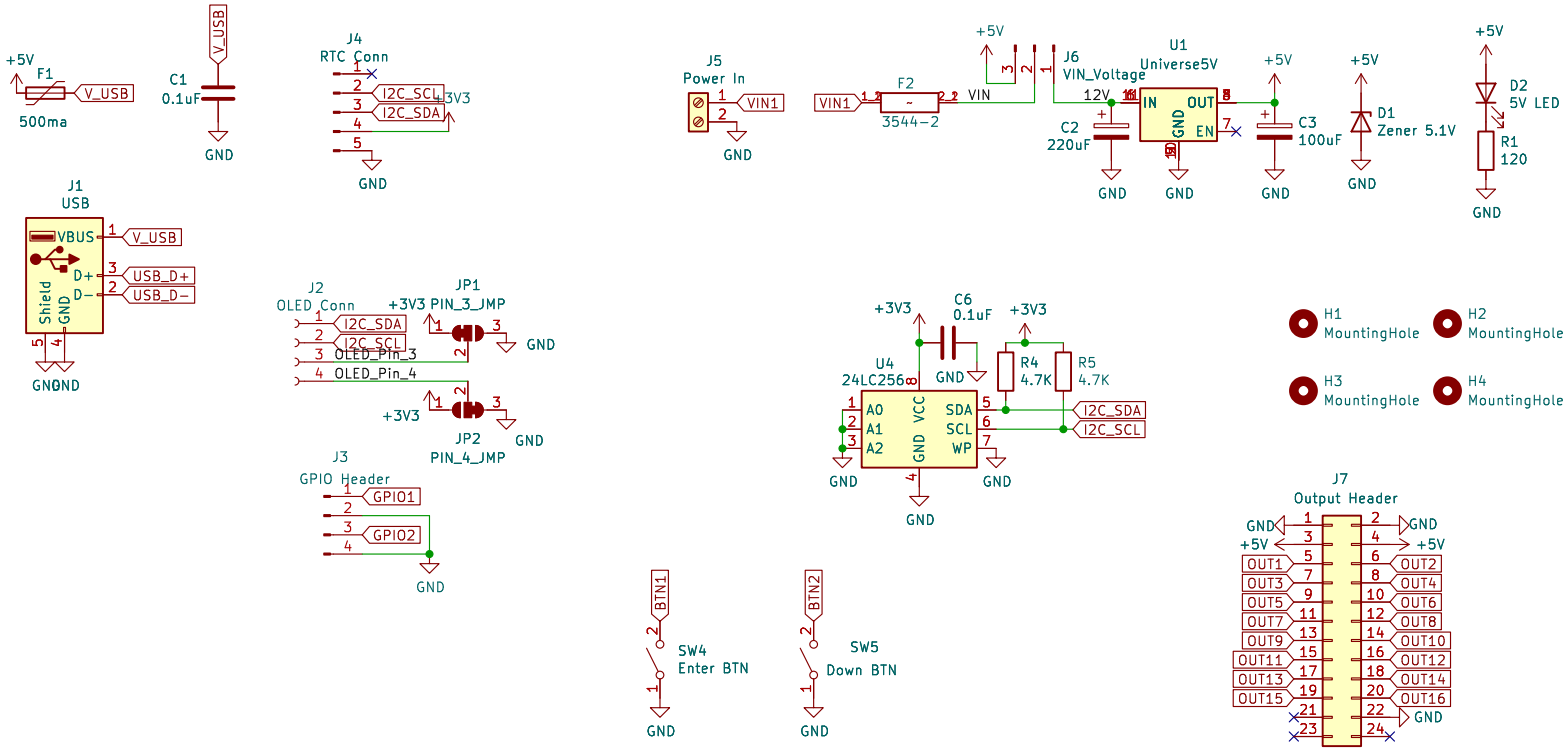

Scott Hanson

Sheet: /

File: PB_16.kicad_sch

Title: PB 16 Mini

Size: A4	Date: 2026-03-04	**Rev: v4**
KiCad E.D.A. 9.0.7		Id: 1/4

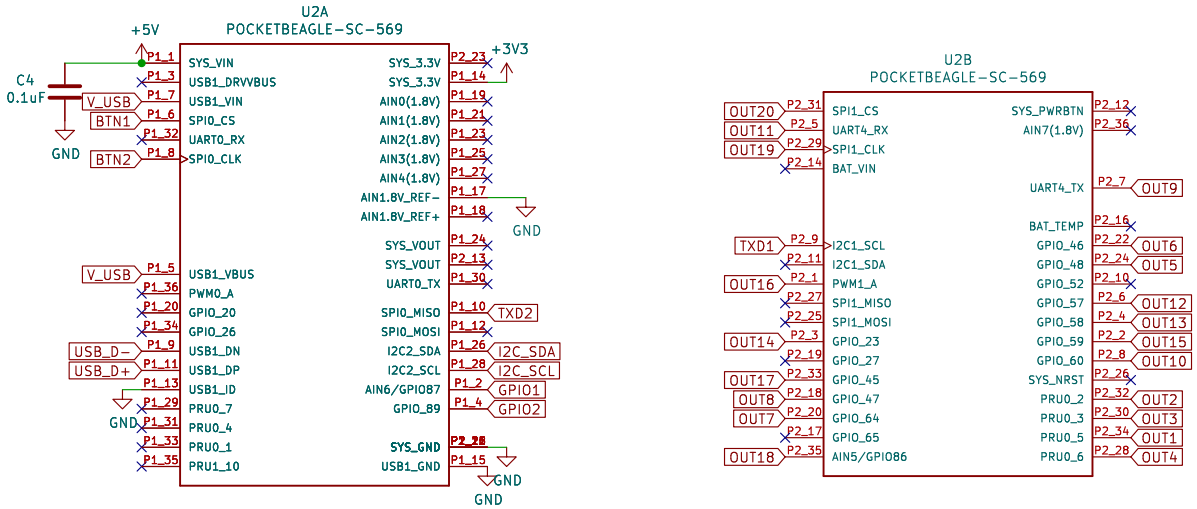

Scott Hanson

Sheet: /PocketBeagle/
File: PocketBeagle.kicad_sch

Title: PB 16 Mini

Size: A4	Date: 2026-03-04	**Rev: v4**
KiCad E.D.A. 9.0.7		Id: 2/4

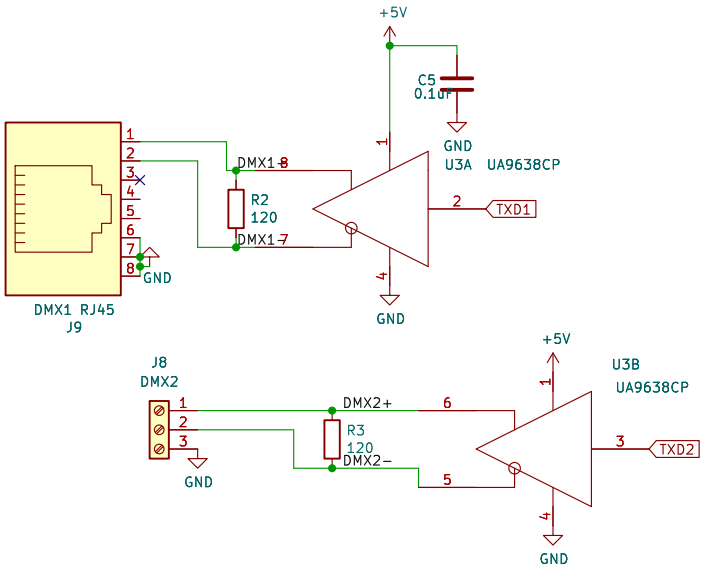

Scott Hanson

Sheet: /Serial/
File: Serial.kicad_sch

Title: PB 16 Mini

Size: A4	Date: 2026-03-04	**Rev: v4**
KiCad E.D.A. 9.0.7		Id: 3/4

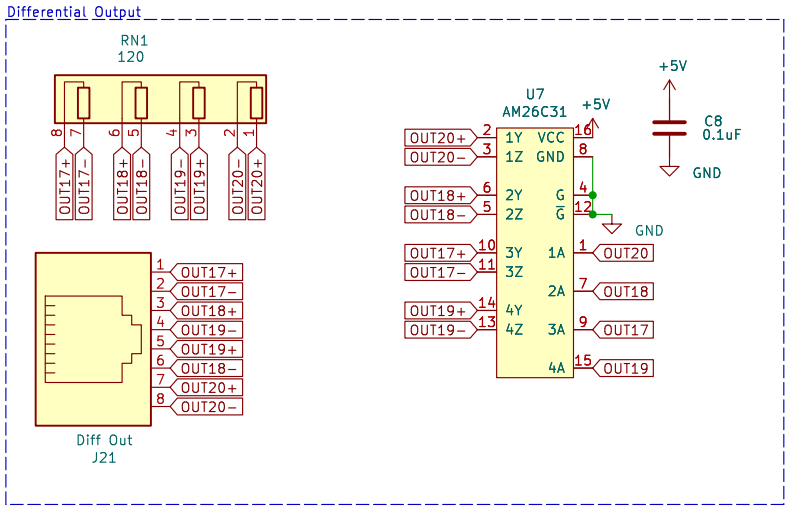

Scott Hanson

Sheet: /Diff/
File: Diff.kicad_sch

Title: PB 16 Mini

Size: A4	Date: 2026-03-04	Rev: v4
KiCad E.D.A. 9.0.7		Id: 4/4