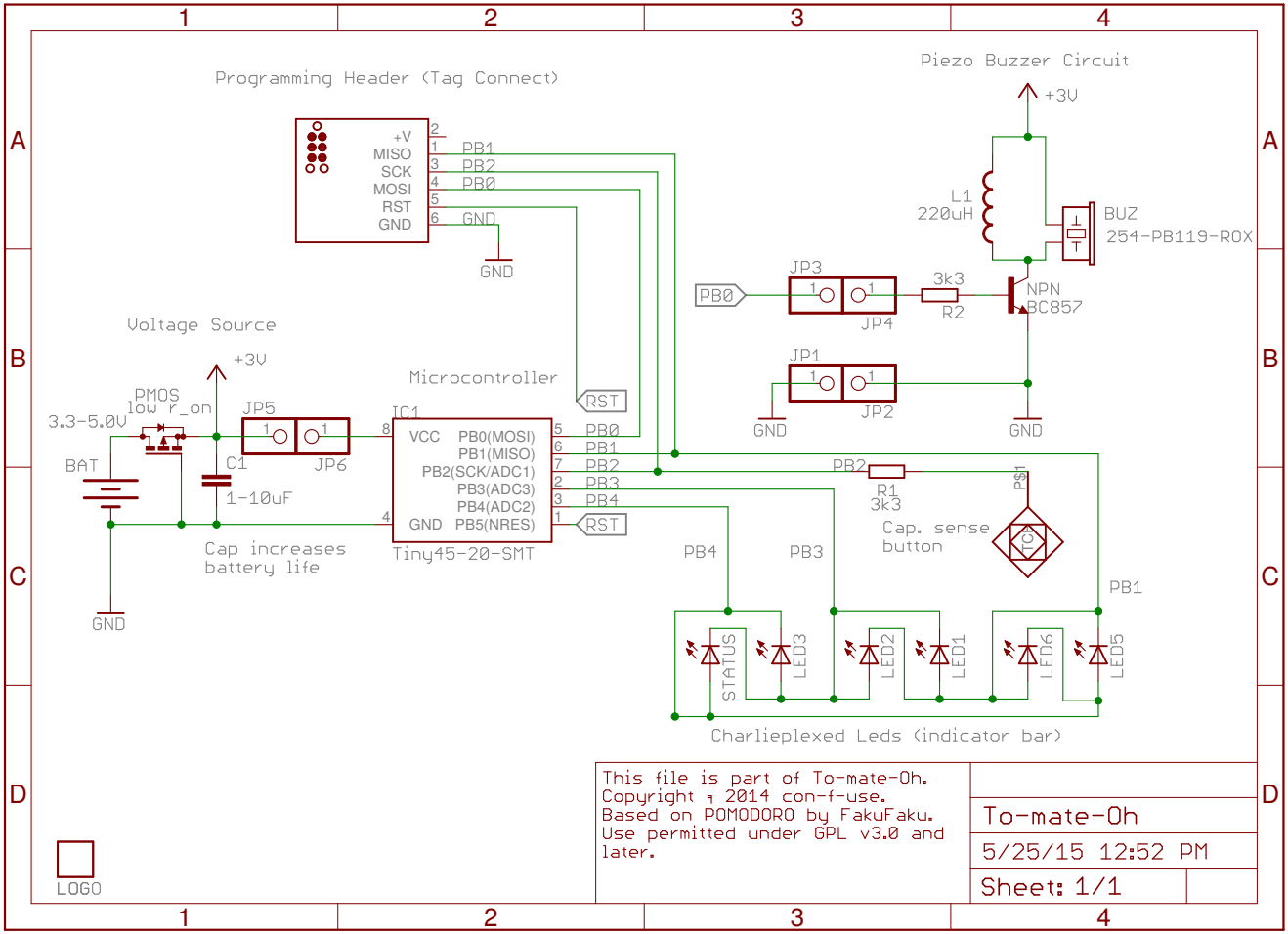

This file is part of To-mate-Oh.
Copyright ¬ 2014 con-f-use.
Based on POMODORO by FakuFaku.
Use permitted under GPL v3.0 and later.

To-mate-Oh

5/25/15 12:52 PM

Sheet: 1/1