4ICT9

Wireless Telecommunication Systems

Outline

- Market
- GSM
  - Overview
  - Services
  - Sub-systems
  - Components

Mobile phone subscribers worldwide

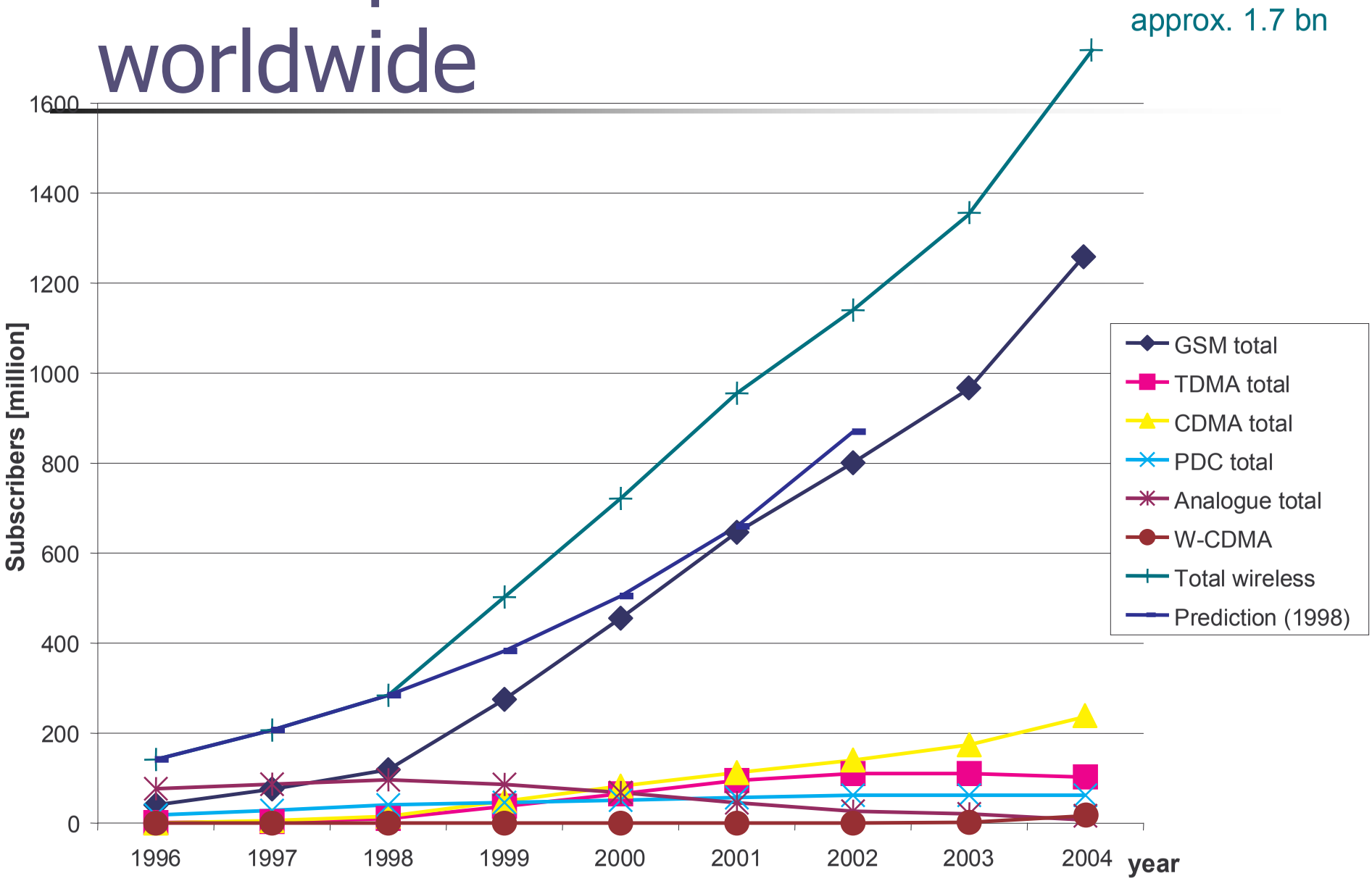

Development of mobile telecoms

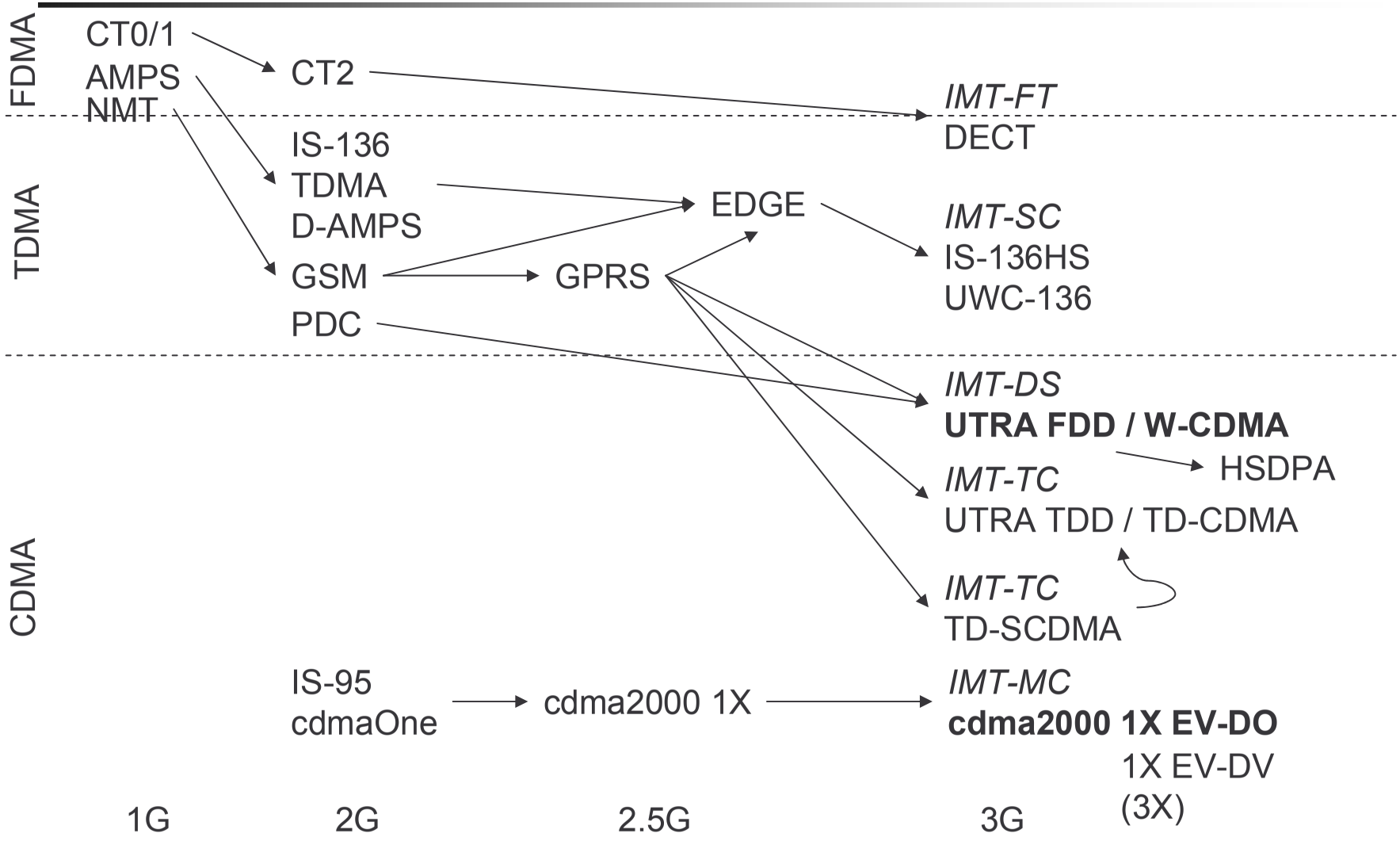

How does it work?

- How can the system locate a user?
- Why don't all phones ring at the same time?
- What happens if two users talk simultaneously?
- Why don't I get the bill from my neighbor?
- Why can an Australian use her phone in Dublin?

- Why can't I simply overhear the neighbor's communication?
- How secure is the mobile phone system?
- What are the key components of the mobile phone network?

GSM: Overview

- GSM
  - formerly: Groupe Spéciale Mobile (founded 1982)
  - now: Global System for Mobile Communication
  - Pan-European standard (ETSI, European Telecommunications Standardisation Institute)
  - simultaneous introduction of essential services in three phases (1991, 1994, 1996) by the European telecommunication administrations (Ireland: ComReg (Commission for Communications Regulation)
    ➔ seamless roaming within Europe possible
  - today many providers all over the world use GSM (more than 200 countries in Asia, Africa, Europe, Australia, America)
  - more than 1.2 billion subscribers in more than 630 networks
  - more than 75% of all digital mobile phones use GSM (74% total)
  - 94% penetration in Ireland, 4% behind the EU average (Luxembourg has 155%, Italy 121% and Belgium 84%, France 75%)
  - over 1,050,876 SMS per quarter in Ireland (ComReg Sept 2005)
  - over 1,261,876 minutes of calls per qtr in Ireland (ComReg Sept 2005)

Performance characteristics of GSM (w.r.t. analogue systems)

- Communication
  - mobile, wireless communication; support for voice and data services
- Total mobility
  - international access, chip-card enables use of access points of different providers
- Worldwide connectivity
  - one number, the network handles localization
- High capacity
  - better frequency efficiency, smaller cells, more customers per cell
- High transmission quality
  - high audio quality and reliability for wireless, uninterrupted phone calls at higher speeds (e.g., from cars, trains)
- Security functions
  - access control, authentication via chip-card and PIN

Disadvantages of GSM

- There is no perfect system!!
- no end-to-end encryption of user data
- no full ISDN bandwidth of 64 kbit/s to the user, no transparent B-channel

- reduced concentration while driving
- electromagnetic radiation

- abuse of private data possible
- roaming profiles accessible

- high complexity of the system
- several incompatibilities within the GSM standards

GSM: Mobile Services

- GSM offers
  - several types of connections
    - voice connections, data connections, short message service
  - multi-service options (combination of basic services)
- Three service domains
  - Bearer Services
  - Telematic Services
  - Supplementary Services

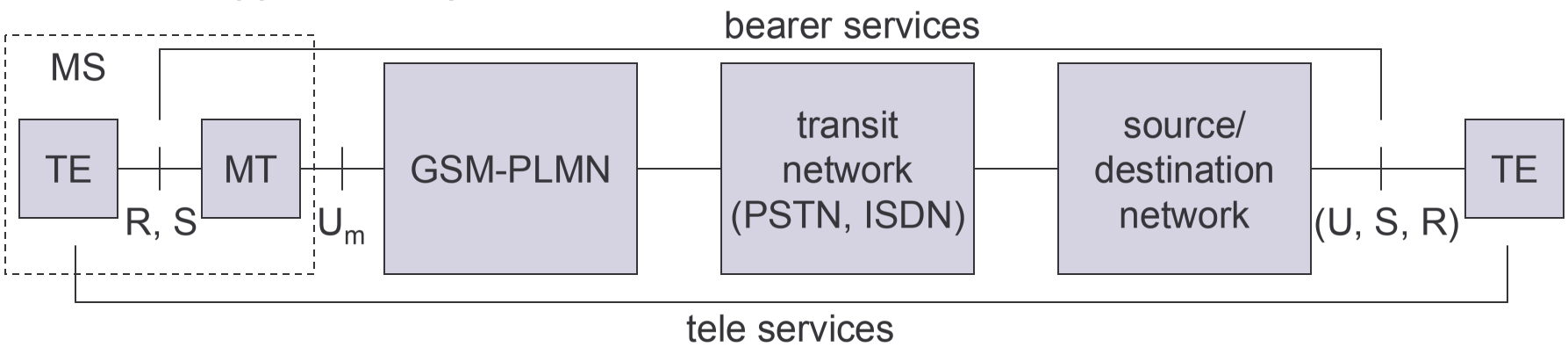

Bearer Services

- Telecommunication services to transfer data between access points
- Specification of services up to the terminal interface (OSI layers 1-3)
- Different data rates for voice and data (original standard)
  - data service (circuit switched)
    - synchronous: 2.4, 4.8 or 9.6 kbit/s
    - asynchronous: 300 - 1200 bit/s
  - data service (packet switched)
    - synchronous: 2.4, 4.8 or 9.6 kbit/s
    - asynchronous: 300 - 9600 bit/s

- Today: data rates of approx. 50 kbit/s possible – will be covered later!

Tele Services I

- Telecommunication services that enable voice communication via mobile phones
- All these basic services have to obey cellular functions, security measurements etc.
- Offered services
  - mobile telephony
    primary goal of GSM was to enable mobile telephony offering the traditional bandwidth of 3.1 kHz
  - Emergency number
    common number throughout Europe (112); mandatory for all service providers; free of charge; connection with the highest priority (preemption of other connections possible)
  - Multinumbering
    several ISDN phone numbers per user possible

Tele Services II

- Additional services
  - Non-Voice-Teleservices
    - group 3 fax
    - voice mailbox (implemented in the fixed network supporting the mobile terminals)
    - electronic mail (MHS, Message Handling System, implemented in the fixed network)
    - ...
    - Short Message Service (SMS)
      alphanumeric data transmission to/from the mobile terminal (160 characters) using the signaling channel, thus allowing simultaneous use of basic services and SMS
      (almost ignored in the beginning now the most successful add-on!)

Supplementary services

- Services in addition to the basic services, cannot be offered stand-alone
- Similar to ISDN services besides lower bandwidth due to the radio link
- May differ between different service providers, countries and protocol versions
- Important services
  - identification: forwarding of caller number
  - suppression of number forwarding
  - automatic call-back
  - conferencing with up to 7 participants
  - locking of the mobile terminal (incoming or outgoing calls)
  - ...

Architecture of the GSM system

- GSM is a PLMN (Public Land Mobile Network)
  - several providers setup mobile networks following the GSM standard within each country
  - components
    - MS (mobile station)
    - BS (base station)
    - MSC (mobile switching center)
    - LR (location register)
  - subsystems
    - RSS (radio subsystem): covers all radio aspects
    - NSS (network and switching subsystem): call forwarding, handover, switching
    - OSS (operation subsystem): management of the network

Mobile Phones, PDAs, etc

The visible but smallest part of the network!

Antennas

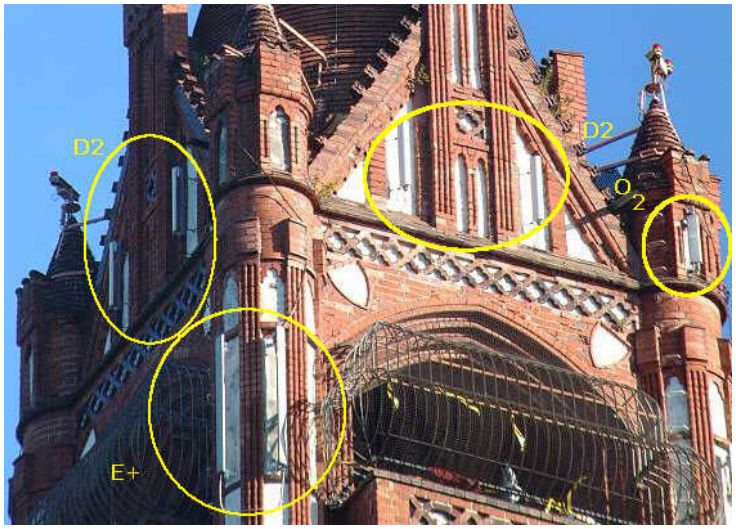

Still visible – cause many discussions…

Infrastructure 1

Base Stations

Cabling

Microwave links

Infrastructure 2

Switching units

Management

Data bases

Monitoring

Not “visible”, but comprise the major part of the network (also from an investment point of view…)

GSM: overview

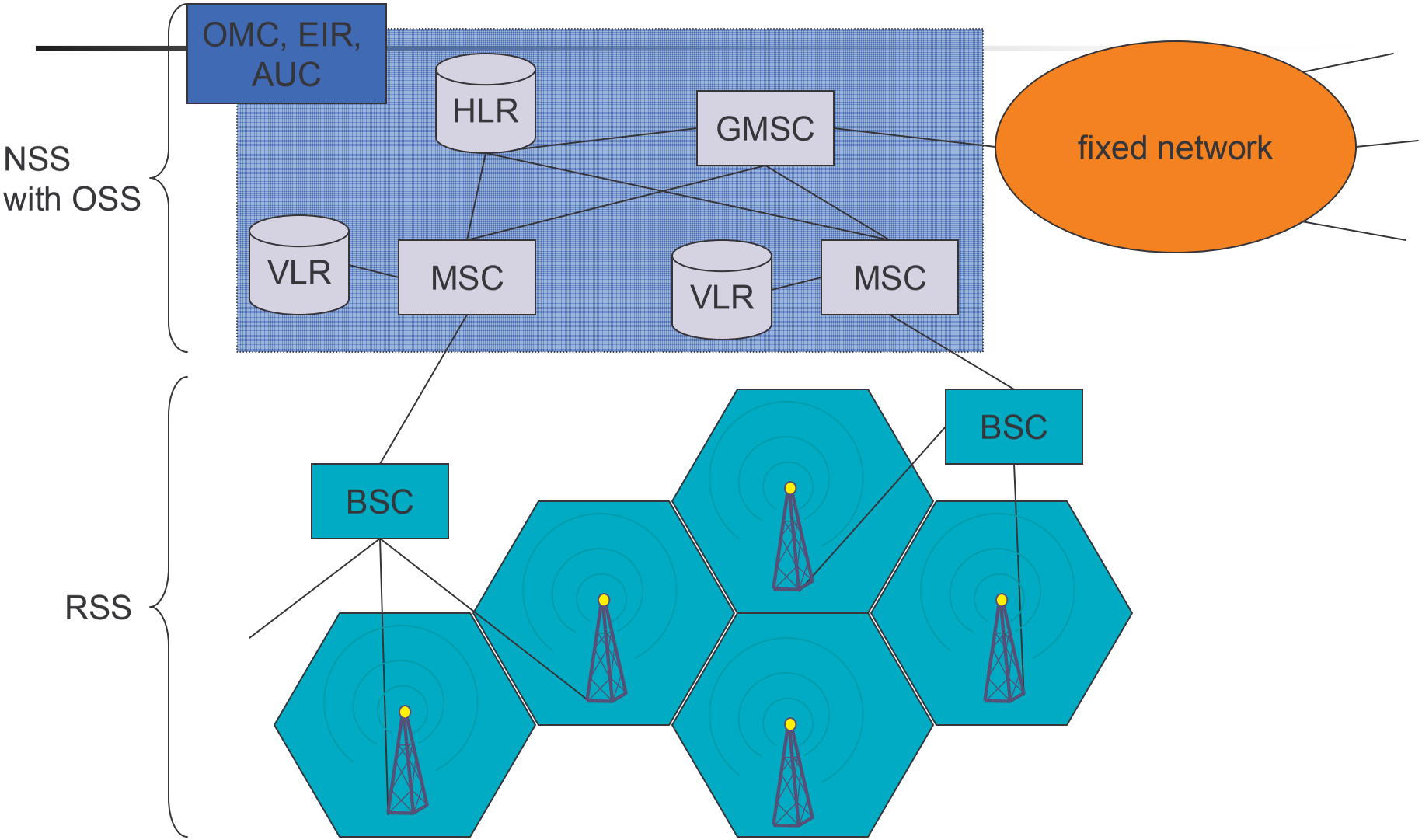

GSM: elements and interfaces

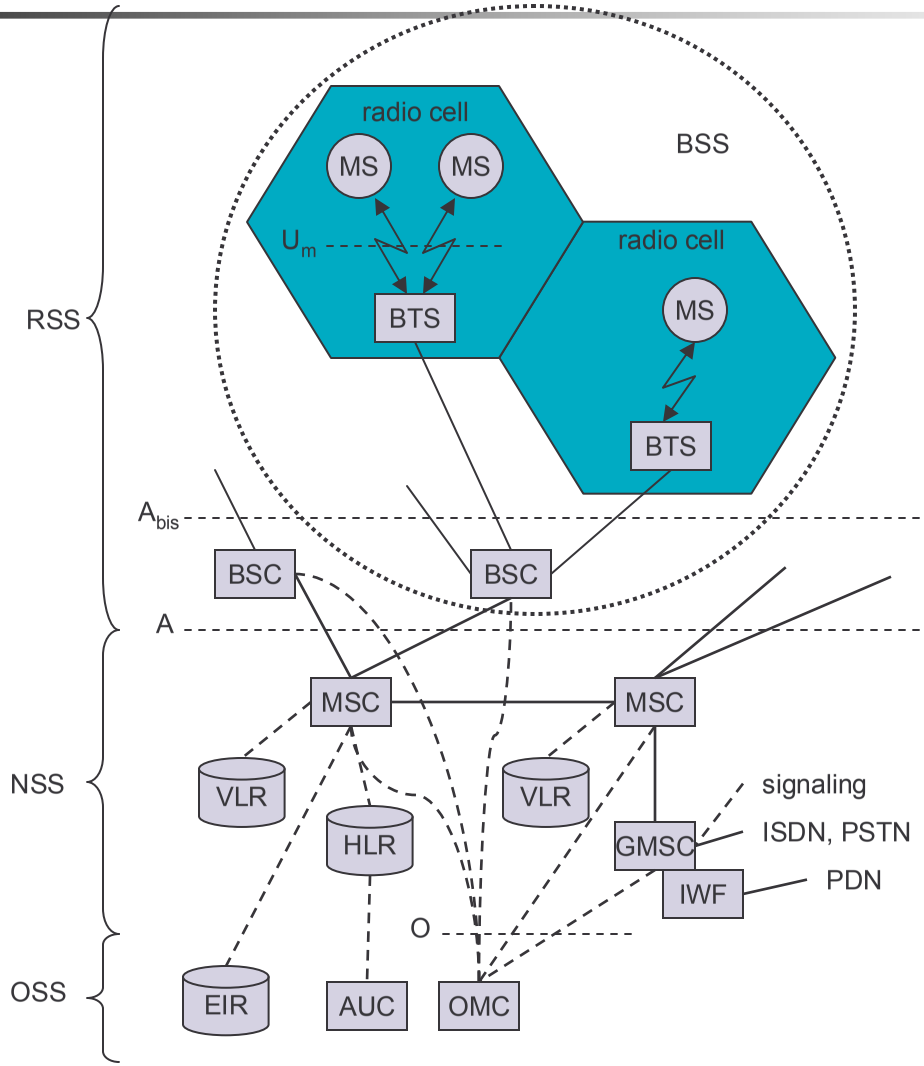

GSM: system architecture

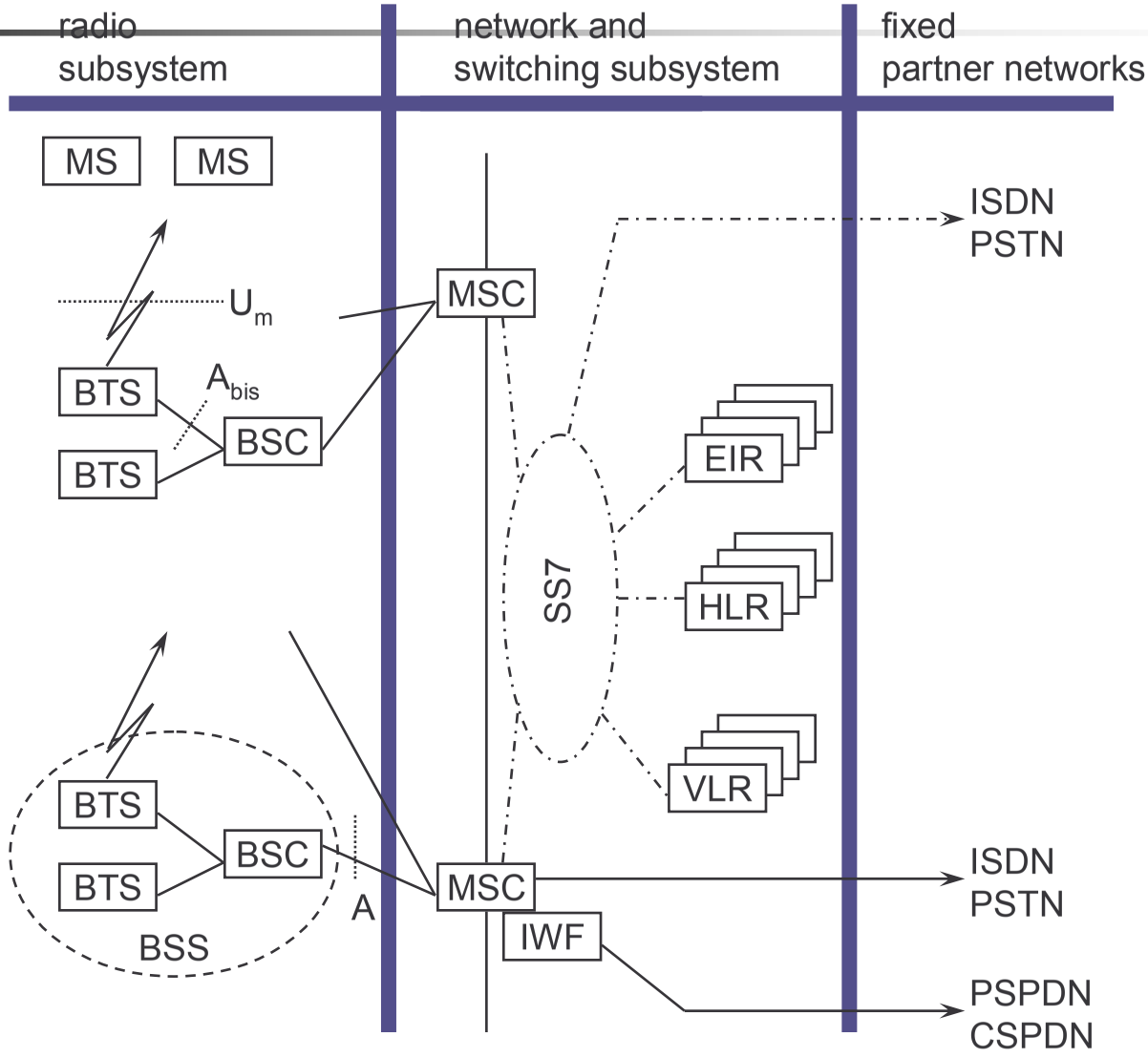

Radio subsystem

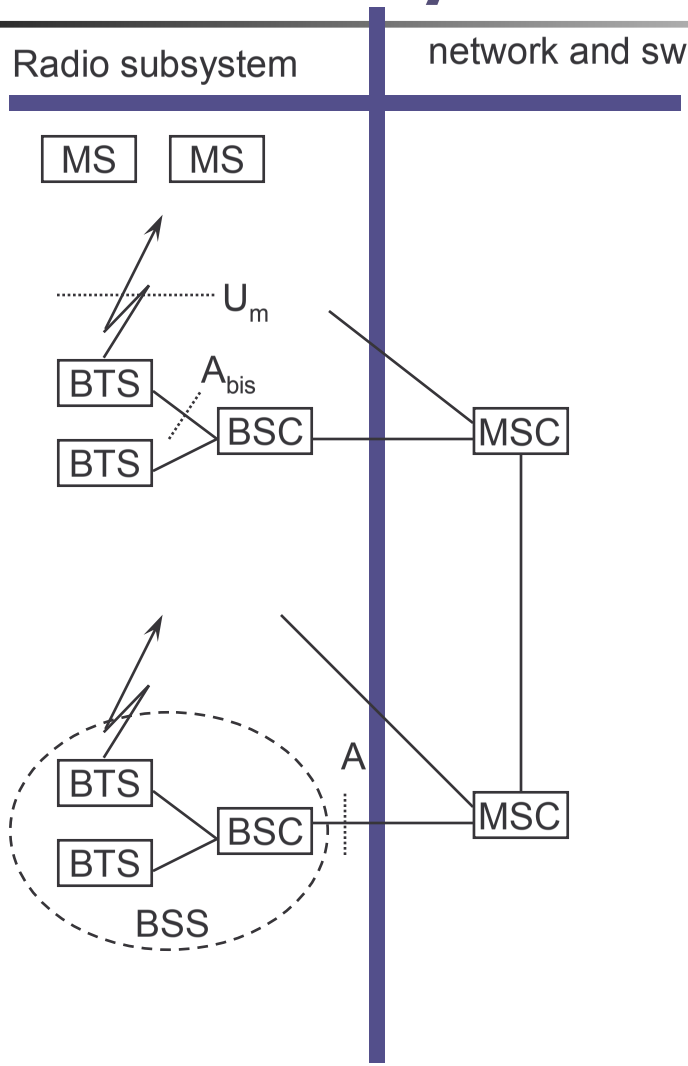

- Components
  - *MS* (Mobile Station)
  - *BSS* (Base Station Subsystem): consisting of
    - *BTS* (Base Transceiver Station): sender and receiver
    - *BSC* (Base Station Controller): controlling several transceivers
- Interfaces
  - U_m : radio interface
  - A_{bis} : standardized, open interface with 16 kbit/s user channels
  - *A*: standardized, open interface with 64 kbit/s user channels

Network and switching subsystem

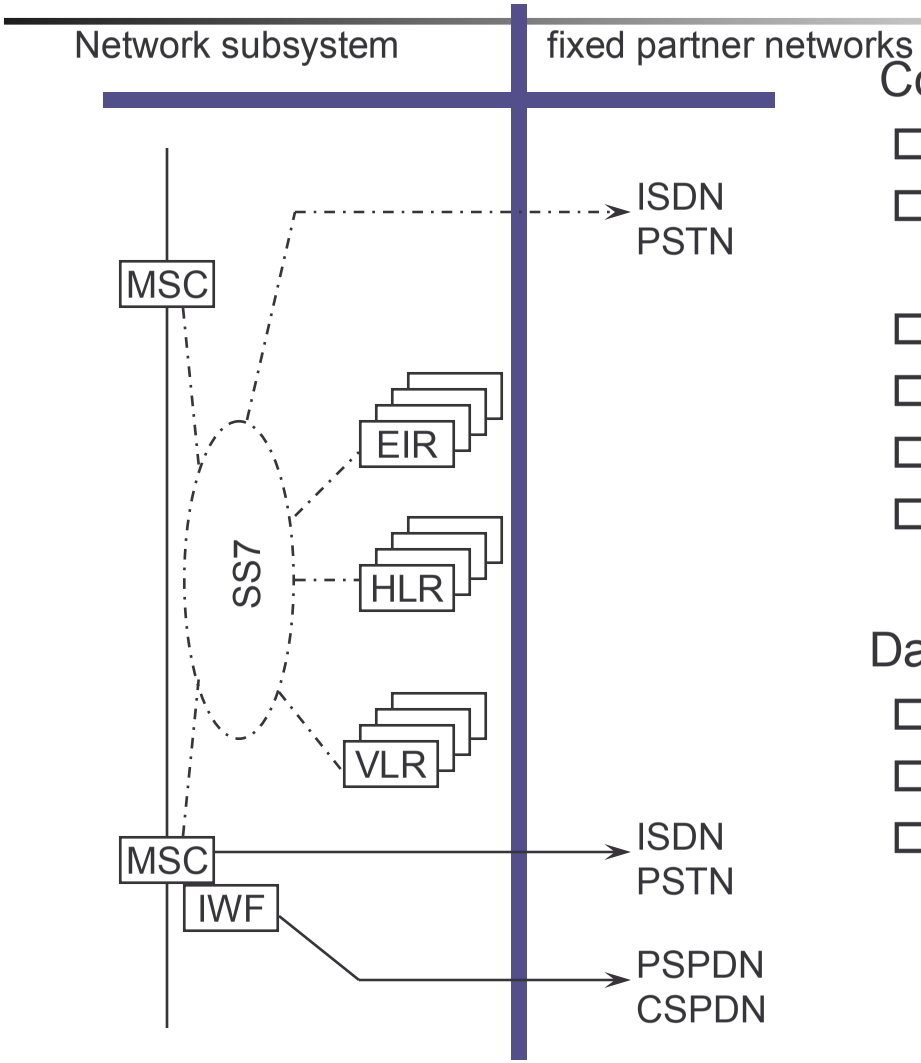

Components

- *MSC* (Mobile Services Switching Center):
- *IWF* (Interworking Functions)

- *ISDN* (Integrated Services Digital Network)
- *PSTN* (Public Switched Telephone Network)
- *PSPDN* (Packet Switched Public Data Net.)
- *CSPDN* (Circuit Switched Public Data Net.)

Databases

- *HLR* (Home Location *R*egister)
- *VLR* (Visitor Location *R*egister)
- *EIR* (Equipment Identity Register)

Radio subsystem

- The Radio Subsystem (RSS) comprises the cellular mobile network up to the switching centers
- Components
  - Base Station Subsystem (BSS):
    - Base Transceiver Station (BTS): radio components including sender, receiver, antenna - if directed antennas are used one BTS can cover several cells
    - Base Station Controller (BSC): switching between BTSs, controlling BTSs, managing of network resources, mapping of radio channels (U_m) onto terrestrial channels (A interface)
    - BSS = BSC + sum(BTS) + interconnection
  - Mobile Stations (MS)

GSM: cellular network

segmentation of the area into cells

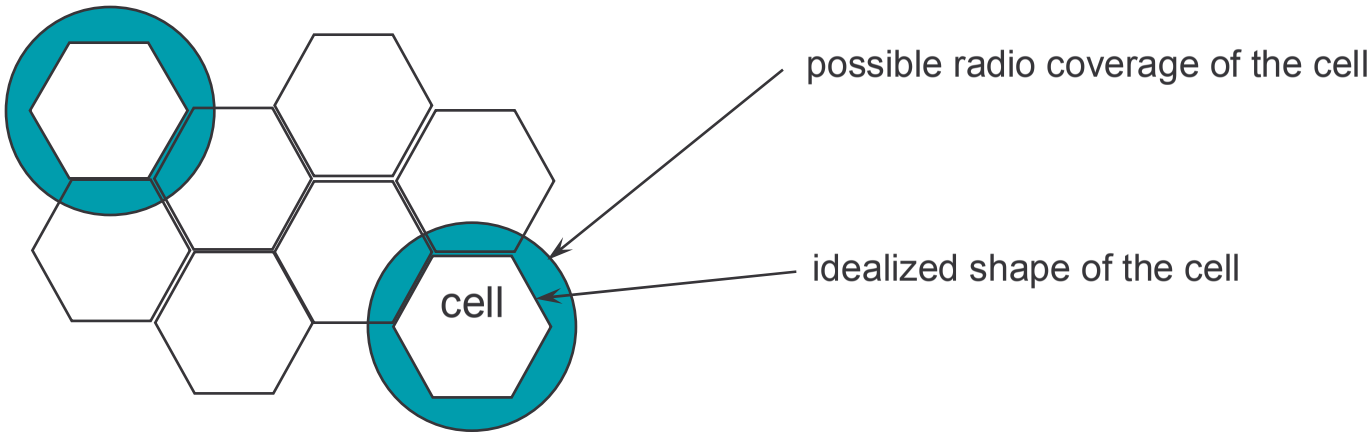

- use of several carrier frequencies
- not the same frequency in adjoining cells
- cell sizes vary from some 100 m up to 35 km depending on user density, geography, transceiver power etc.
- hexagonal shape of cells is idealized (cells overlap, shapes depend on geography)
- if a mobile user changes cells
  ➔ handover of the connection to the neighbour cell

GSM frequency bands

Type	Channels	Uplink [MHz]	Downlink [MHz]
GSM 850 (Americas)	128-251	824-849	869-894
GSM 900 classical extended	0-124, 955-1023 124 channels +49 channels	876-915 890-915 880-915	921-960 935-960 925-960
GSM 1800	512-885	1710-1785	1805-1880
GSM 1900 (Americas)	512-810	1850-1910	1930-1990
GSM-R exclusive	955-1024, 0-124 69 channels	876-915 876-880	921-960 921-925

- Additionally: GSM 400 (also named GSM 450 or GSM 480 at 450-458/460-468 or 479-486/489-496 MHz
- Please note: frequency ranges may vary depending on the country!
- Channels at the lower/upper edge of a frequency band are typically not used

Example coverage of GSM networks (www.gsmworld.com)

T-Mobile (GSM-900/1800) Germany

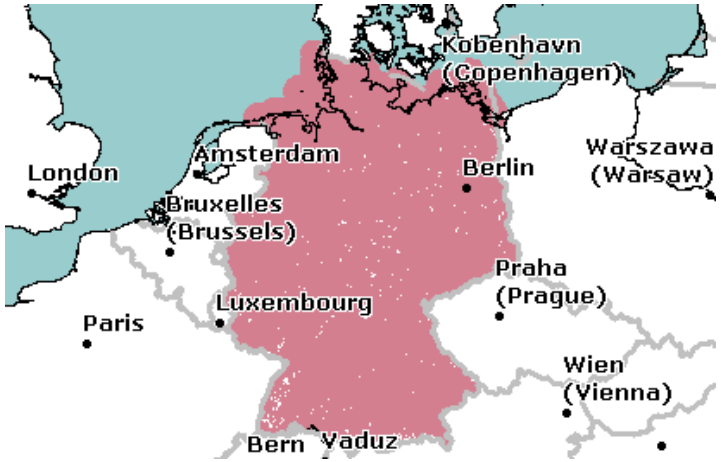

O_2 (GSM-1800) Germany

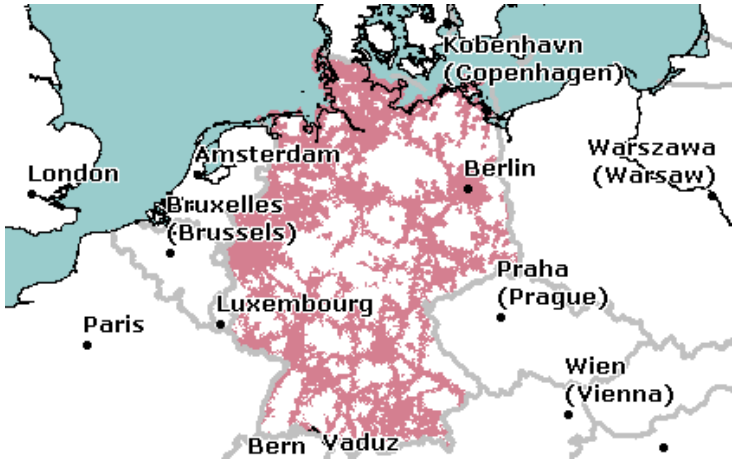

AT&T (GSM-850/1900) USA

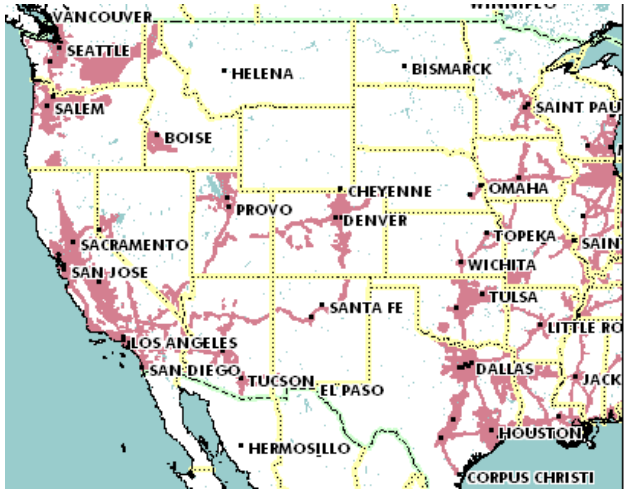

Vodacom (GSM-900) South Africa

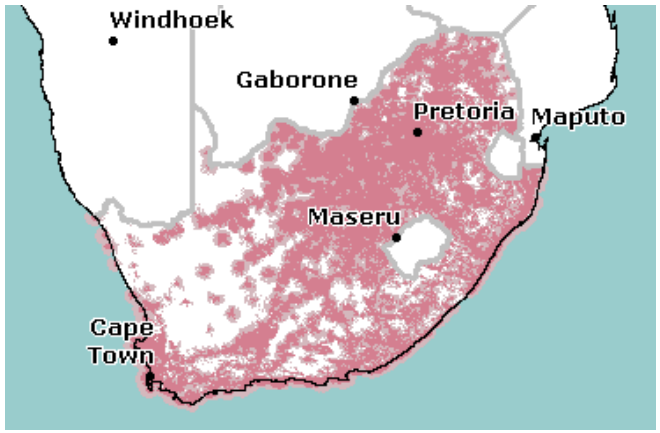

Vodafone

Operator Name: Vodafone Ireland Ltd.
Network Name: vodafone
Technology: GSM 900/1800
Network Status: Live July 1993

Supplementary Services:

Barring of All Incoming Calls
Barring of All Incoming Calls when roaming
Barring of All Outgoing Calls
Barring of Outgoing International Calls
Barring of Outgoing International Calls except those directed to the Home PLMN
Call Forwarding Unconditional
Call Forwarding on Mobile Subscriber Busy
Call Forwarding on Mobile Subscriber Not Reachable
Call Forwarding on No Reply
Call Hold
Call Waiting

Tele Services

Automatic facsimile group 3
Short message MO/PP
Short message MT/PP

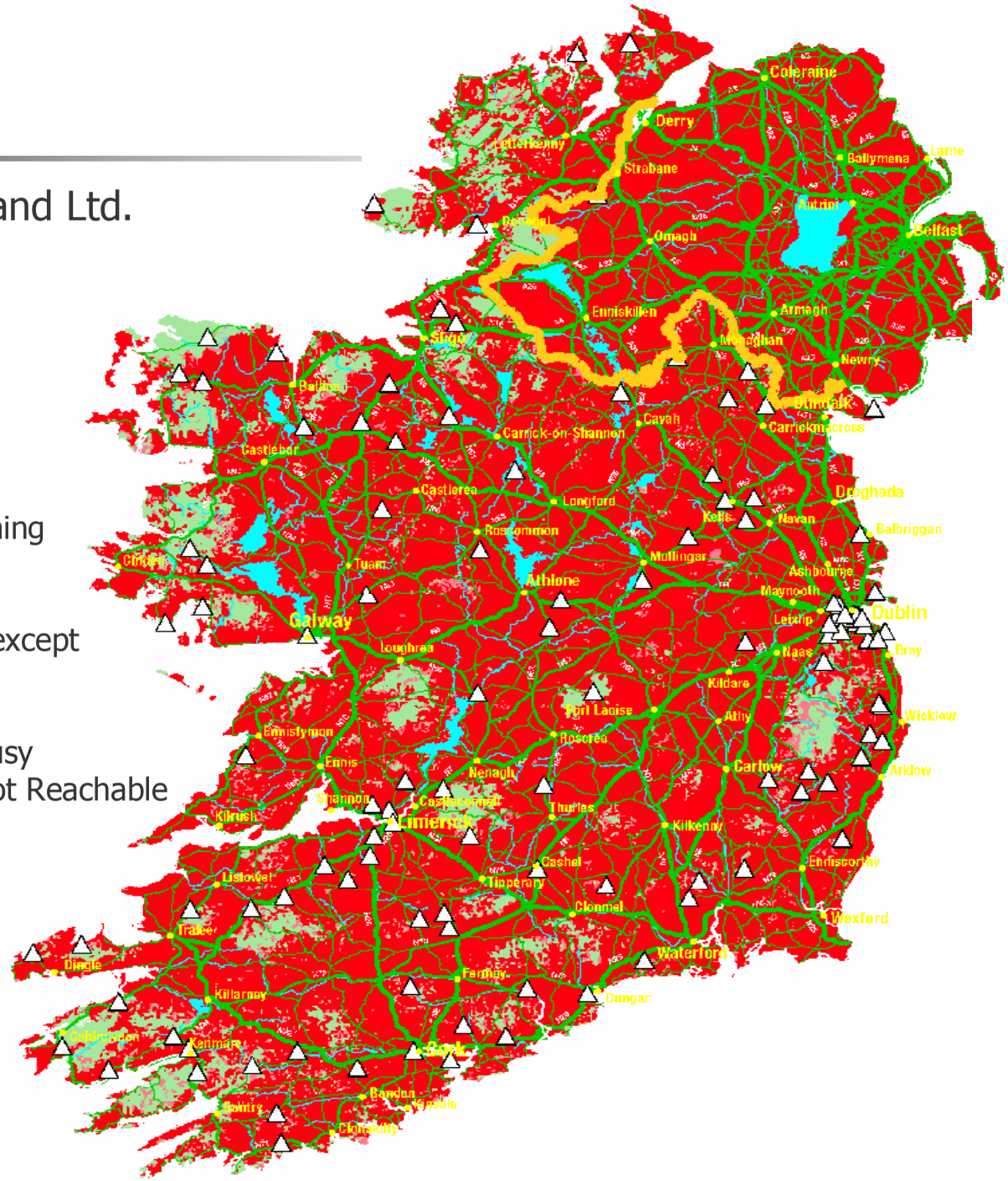

Meteor

Operator Name: Meteor Mobile Telecommunications Limited
Network Name: Meteor
Technology: GSM 900/1800
Network Status: Live February 2001

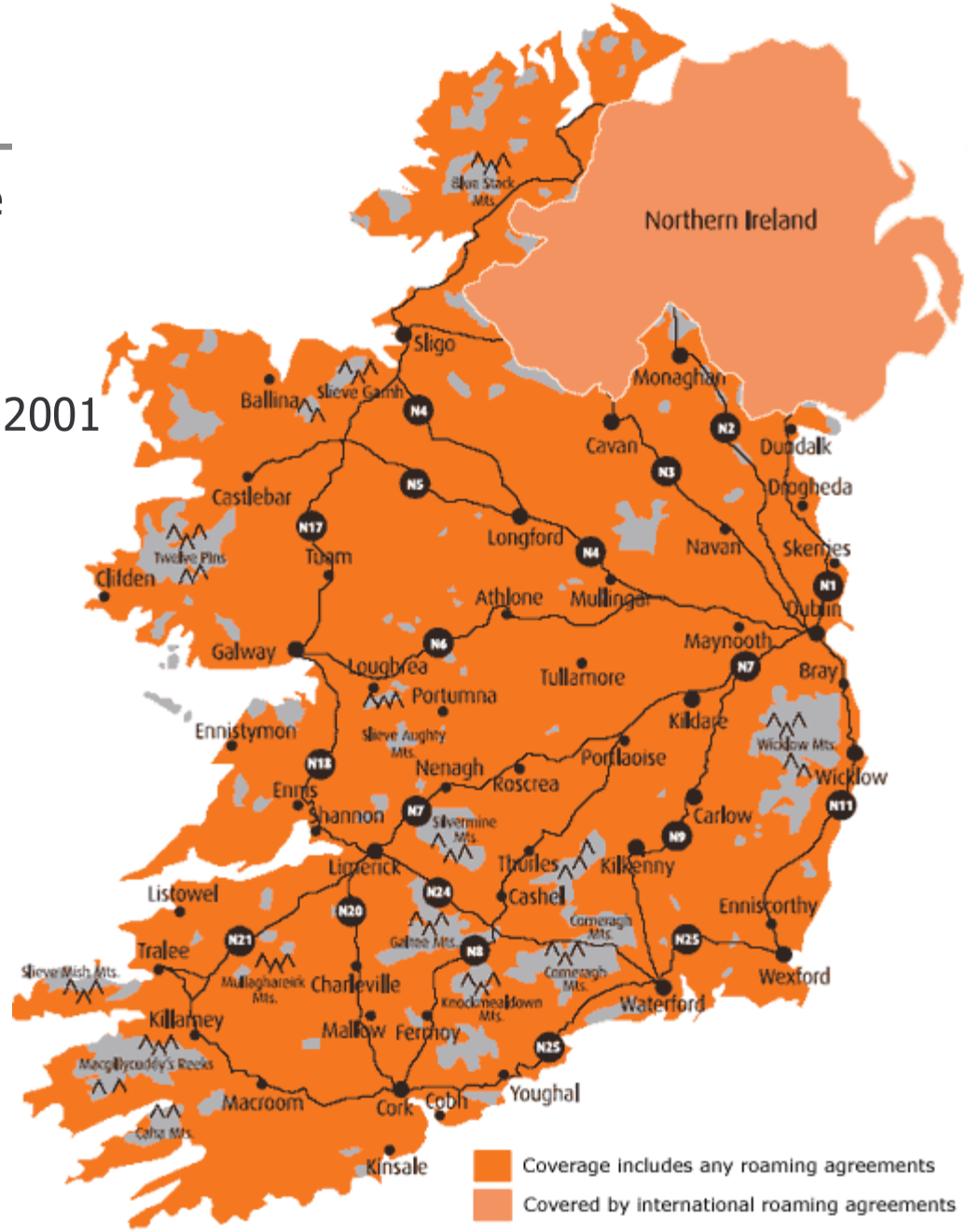

Base Transceiver Station and Base Station Controller

- Tasks of a BSS are distributed over BSC and BTS
- BTS comprises radio specific functions
- BSC is the switching center for radio channels

Functions	BTS	BSC
Management of radio channels		X
Frequency hopping (FH)	X	X
Management of terrestrial channels		X
Mapping of terrestrial onto radio channels		X
Channel coding and decoding	X	
Rate adaptation	X	
Encryption and decryption	X	X
Paging	X	X
Uplink signal measurements	X	
Traffic measurement		X
Authentication		X
Location registry, location update		X
Handover management		X

Mobile station

- Terminal for the use of GSM services
- A mobile station (MS) comprises several functional groups
  - MT (Mobile Terminal):
    - offers common functions used by all services the MS offers
    - corresponds to the network termination (NT) of an ISDN access
    - end-point of the radio interface (U_m)
  - TA (Terminal Adapter):
    - terminal adaptation, hides radio specific characteristics
  - TE (Terminal Equipment):
    - peripheral device of the MS, offers services to a user
    - does not contain GSM specific functions
  - SIM (Subscriber Identity Module):
    - personalization of the mobile terminal, stores user parameters

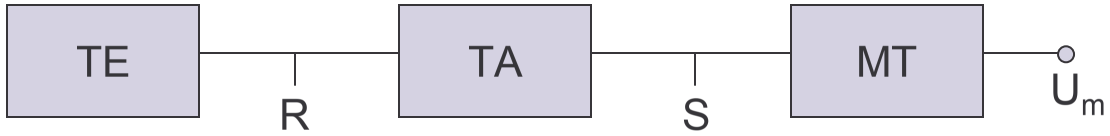

Network and switching subsystem

- NSS is the main component of the public mobile network GSM
  - switching, mobility management, interconnection to other networks, system control
- Components
  - Mobile Services Switching Center (MSC)
    controls all connections via a separated network to/from a mobile terminal within the domain of the MSC - several BSC can belong to a MSC
  - Databases (important: scalability, high capacity, low delay)
    - Home Location Register (HLR)
      central master database containing user data, permanent and semi-permanent data of all subscribers assigned to the HLR (one provider can have several HLRs)
    - Visitor Location Register (VLR)
      local database for a subset of user data, including data about all user currently in the domain of the VLR

Mobile Services Switching Center

- The MSC (mobile switching center) plays a central role in GSM
  - switching functions
  - additional functions for mobility support
  - management of network resources
  - interworking functions via Gateway MSC (GMSC)
  - integration of several databases
- Functions of a MSC
  - specific functions for paging and call forwarding
  - termination of SS7 (signaling system no. 7)
  - mobility specific signaling
  - location registration and forwarding of location information
  - provision of new services (fax, data calls)
  - support of short message service (SMS)
  - generation and forwarding of accounting and billing information

Operation subsystem

- The OSS (Operation Subsystem) enables centralized operation, management, and maintenance of all GSM subsystems
- Components
  - Authentication Center (AUC)
    - generates user specific authentication parameters on request of a VLR
    - authentication parameters used for authentication of mobile terminals and encryption of user data on the air interface within the GSM system
  - Equipment Identity Register (EIR)
    - registers GSM mobile stations and user rights
    - stolen or malfunctioning mobile stations can be locked and sometimes even localized
  - Operation and Maintenance Center (OMC)
    - different control capabilities for the radio subsystem and the network subsystem

GSM - TDMA/FDMA

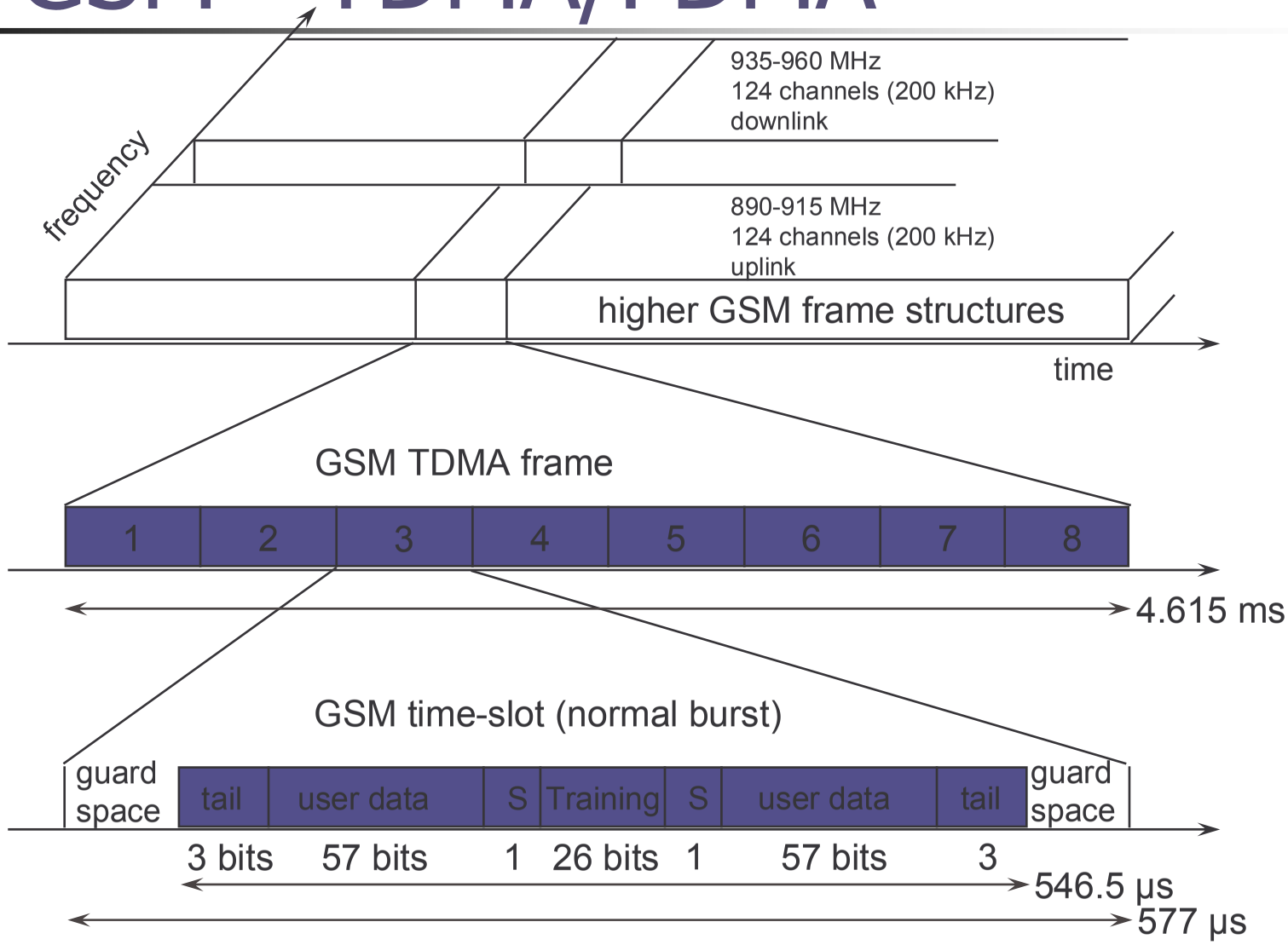

GSM hierarchy of frames

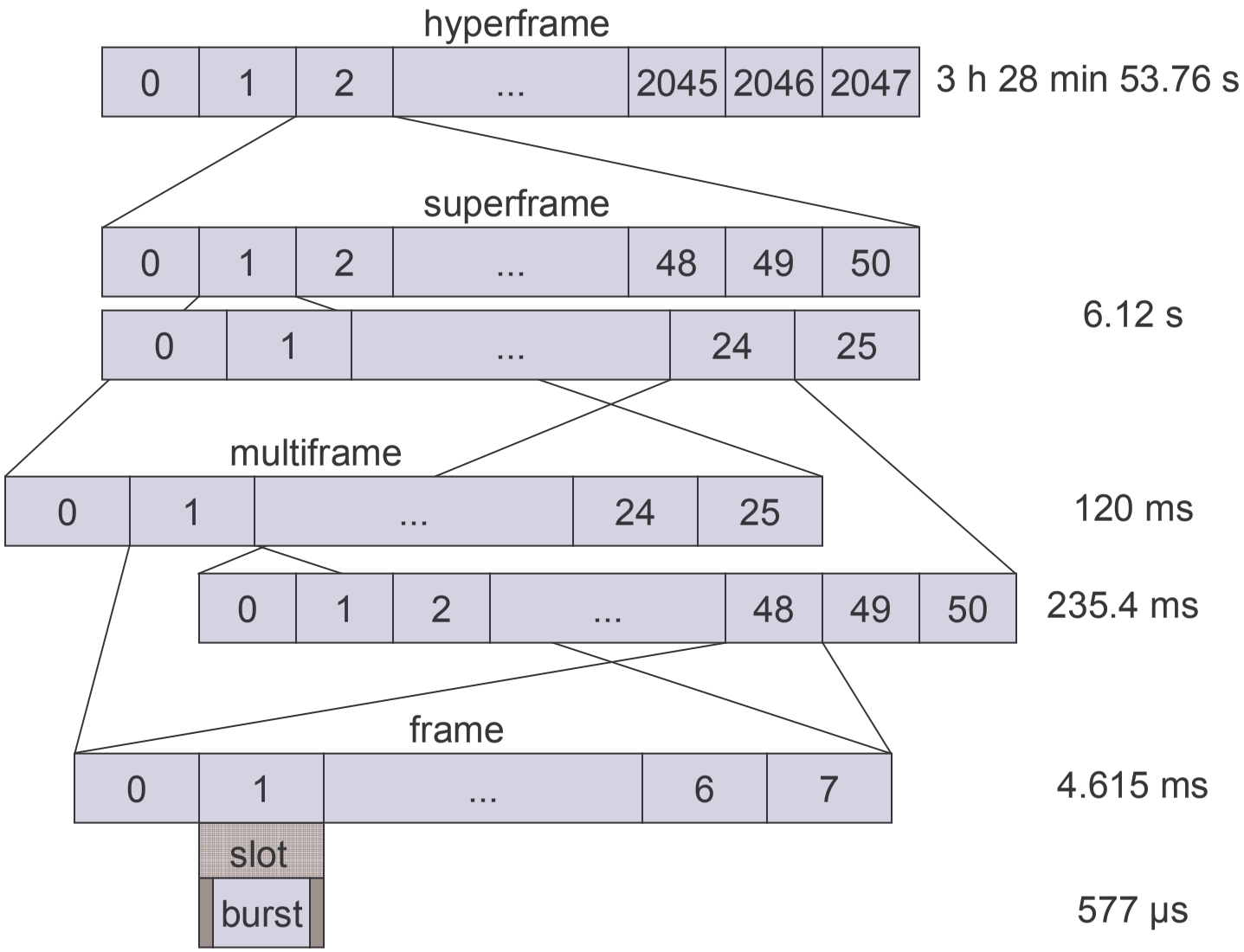

GSM protocol layers for signaling

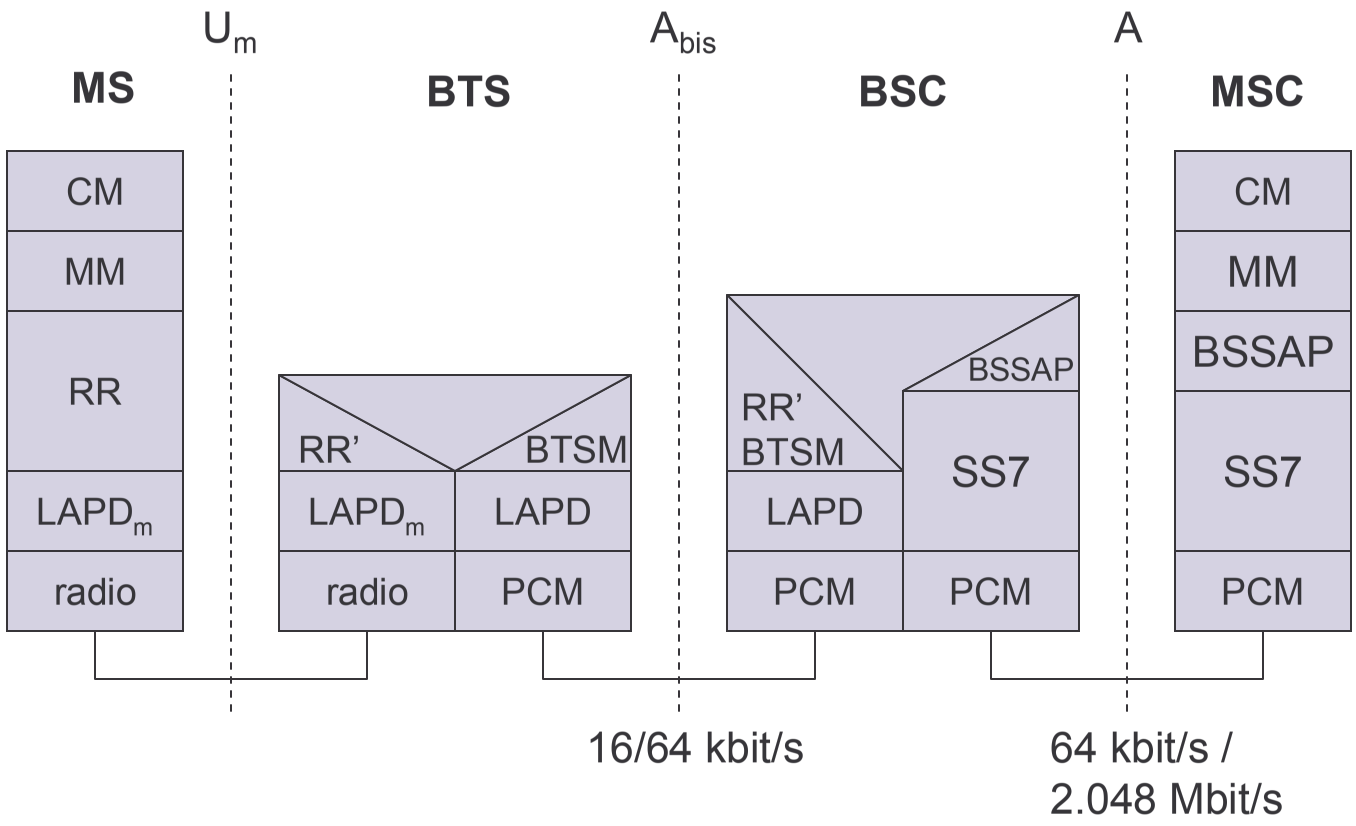

Mobile Terminated Call

- 1: calling a GSM subscriber
- 2: forwarding call to GMSC
- 3: signal call setup to HLR
- 4, 5: request MSRN from VLR
- 6: forward responsible MSC to GMSC
- 7: forward call to
- current MSC
- 8, 9: get current status of MS
- 10, 11: paging of MS
- 12, 13: MS answers
- 14, 15: security checks
- 16, 17: set up connection

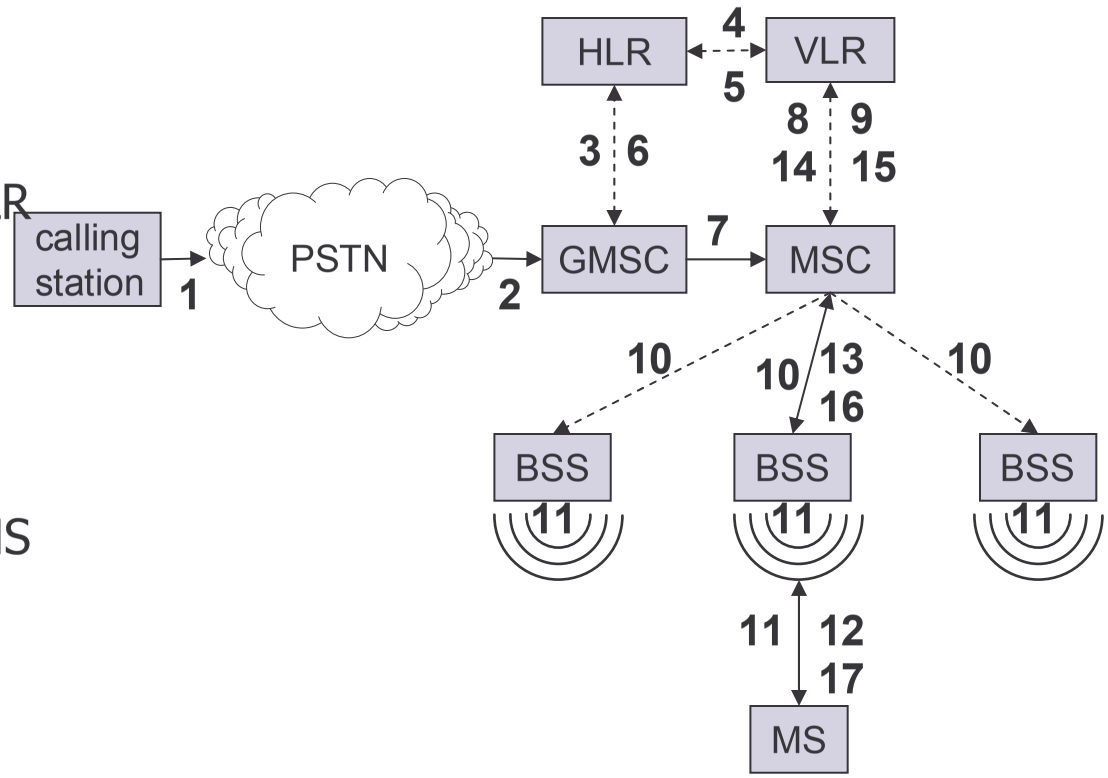

Mobile Originated Call

- 1, 2: connection request
- 3, 4: security check
- 5-8: check resources (free circuit)
- 9-10: set up call

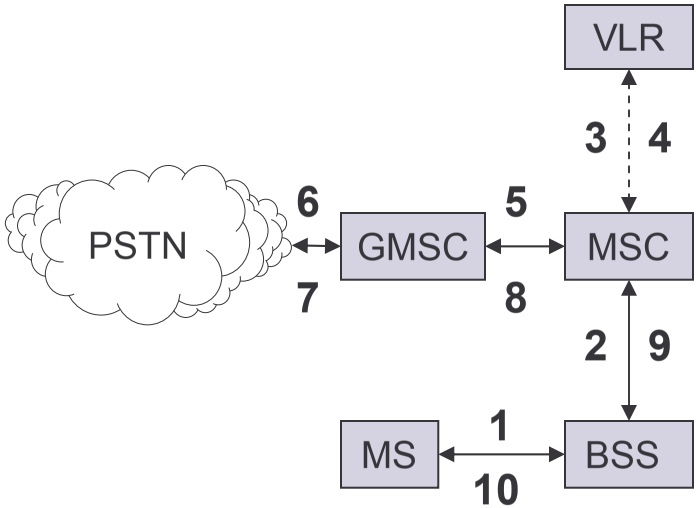

MTC/MOC

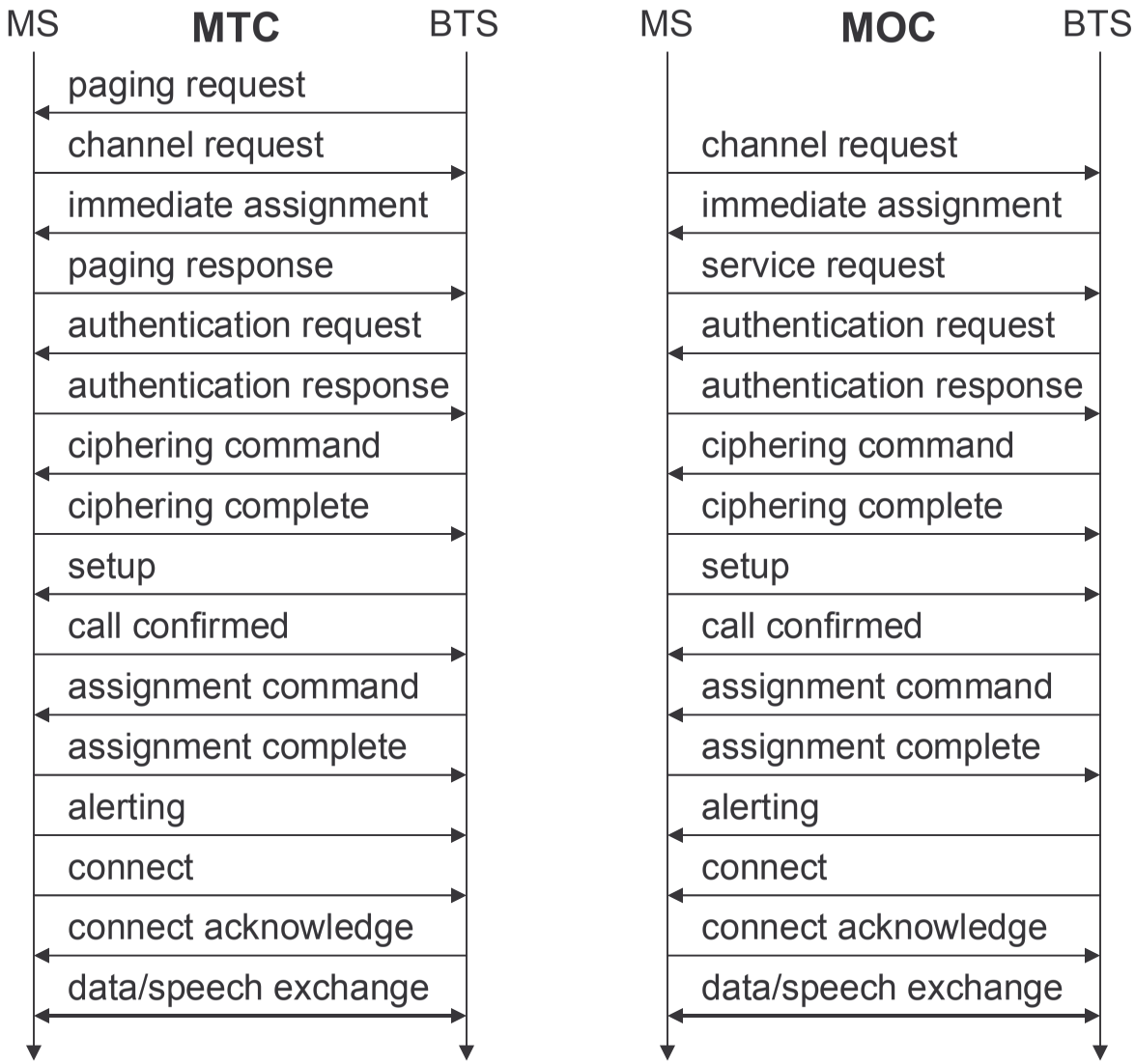
MS
MTC
BTS
paging request
channel request
immediate assignment
paging response
authentication request
authentication response
ciphering command
ciphering complete
setup
call confirmed
assignment command
assignment complete
alerting
connect
connect acknowledge
data/speech exchange
MS
MOC
BTS
channel request
immediate assignment
service request
authentication request
authentication response
ciphering command
ciphering complete
setup
call confirmed
assignment command
assignment complete
alerting
connect
connect acknowledge
data/speech exchange

4 types of handover

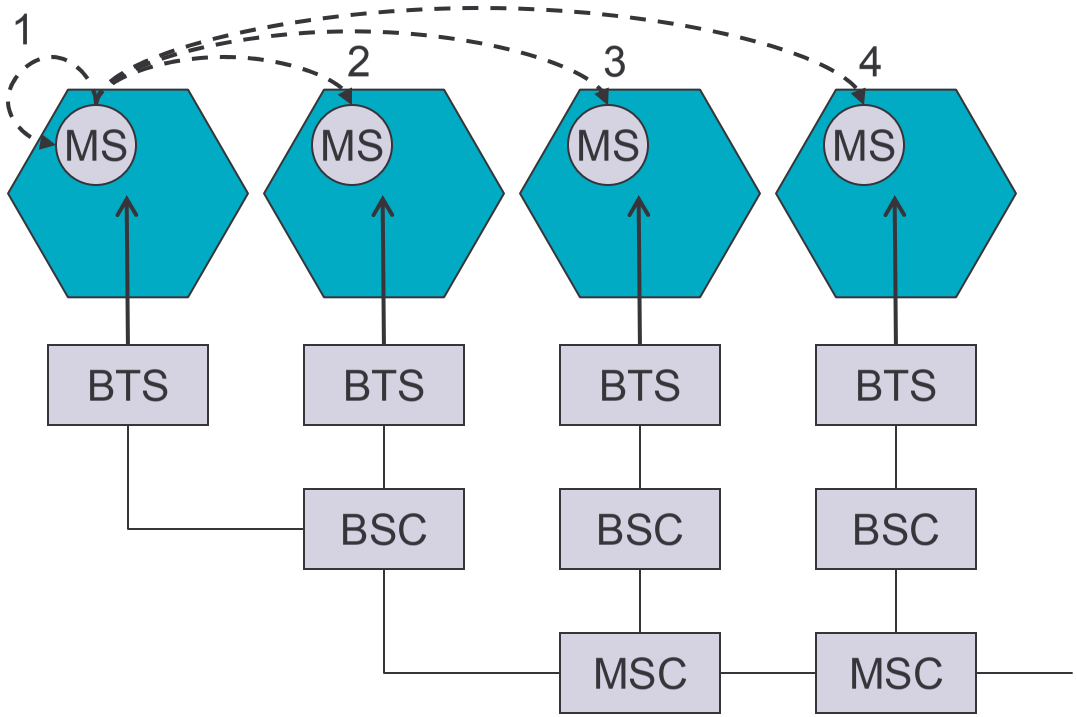

Handover decision

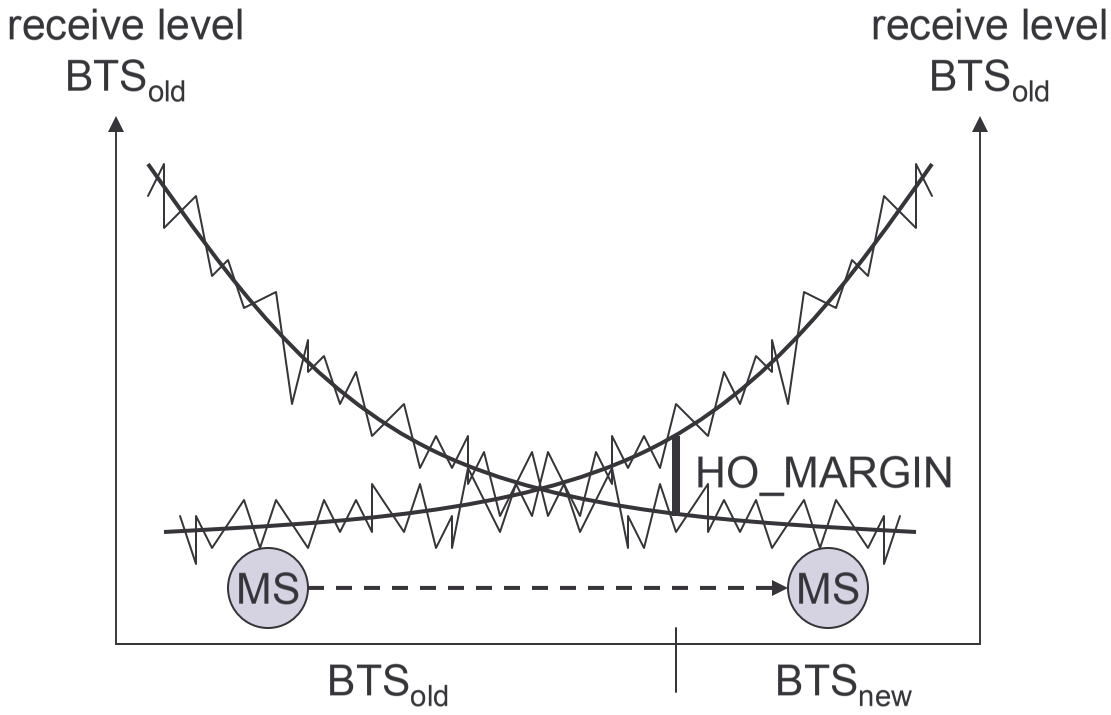

Handover procedure

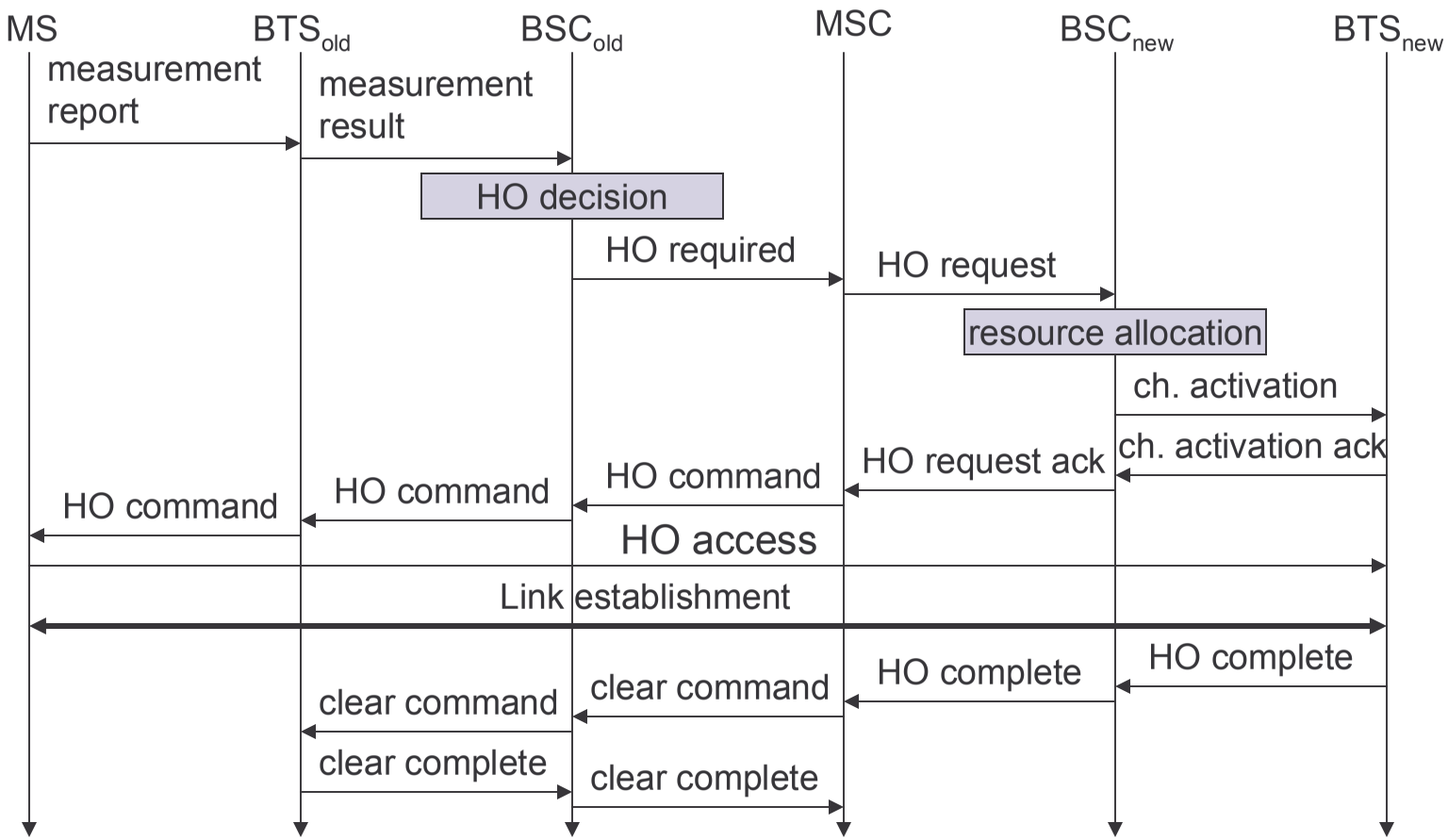

Security in GSM

- Security services
  - access control/authentication
    - user ⇔ SIM (Subscriber Identity Module): secret PIN (personal identification number)
    - SIM ⇔ network: challenge response method
  - confidentiality
    - voice and signaling encrypted on the wireless link (after successful authentication)
  - anonymity
    - temporary identity TMSI (Temporary Mobile Subscriber Identity)
    - newly assigned at each new location update (LUP)
    - encrypted transmission
- 3 algorithms specified in GSM
  - A3 for authentication ("secret", open interface)
  - A5 for encryption (standardized)
  - A8 for key generation ("secret", open interface)

"secret":
• A3 and A8 available via the Internet
• network providers can use stronger mechanisms

GSM - authentication

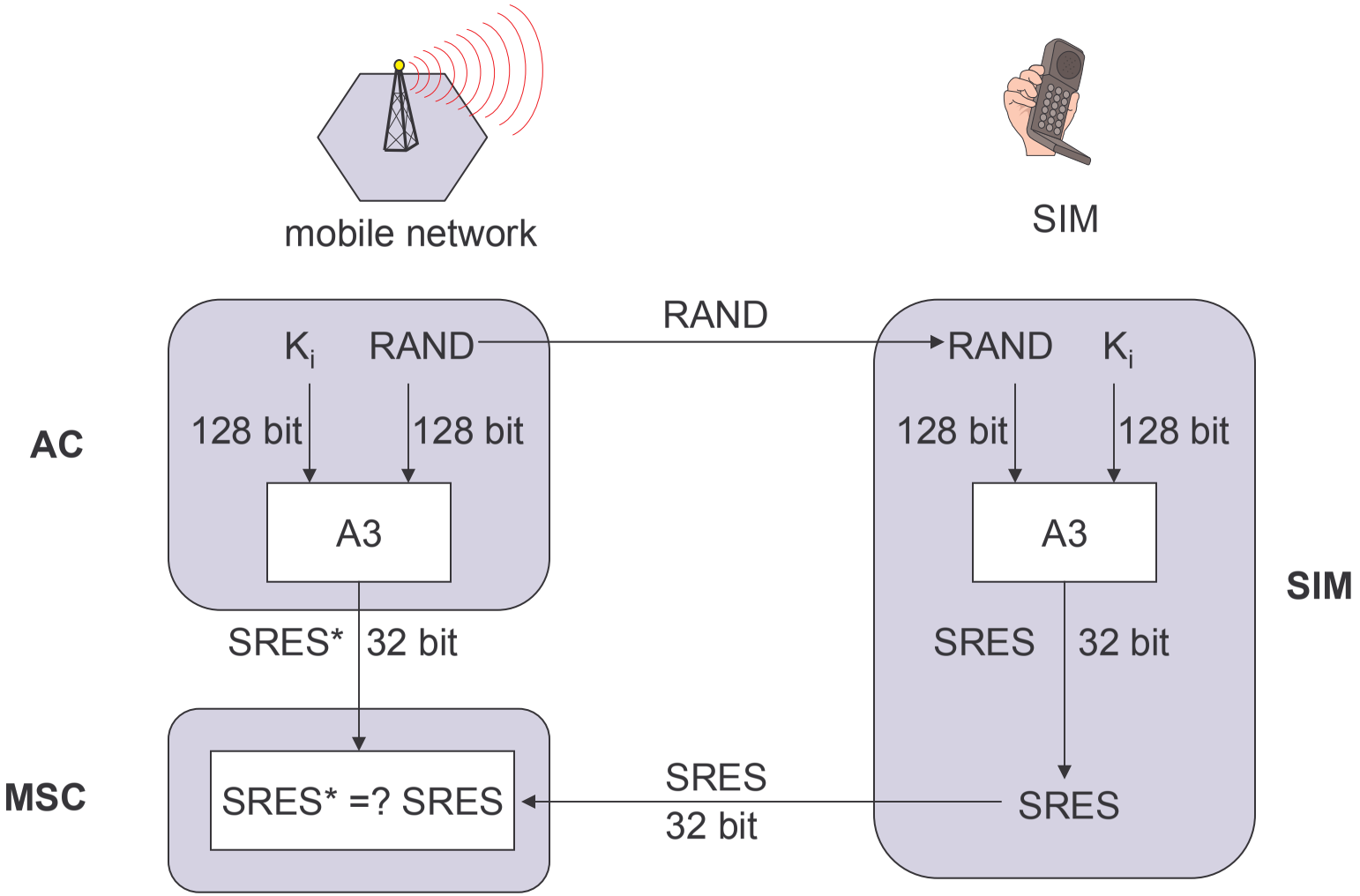

K_i: individual subscriber authentication key SRES: signed response

GSM - key generation and encryption

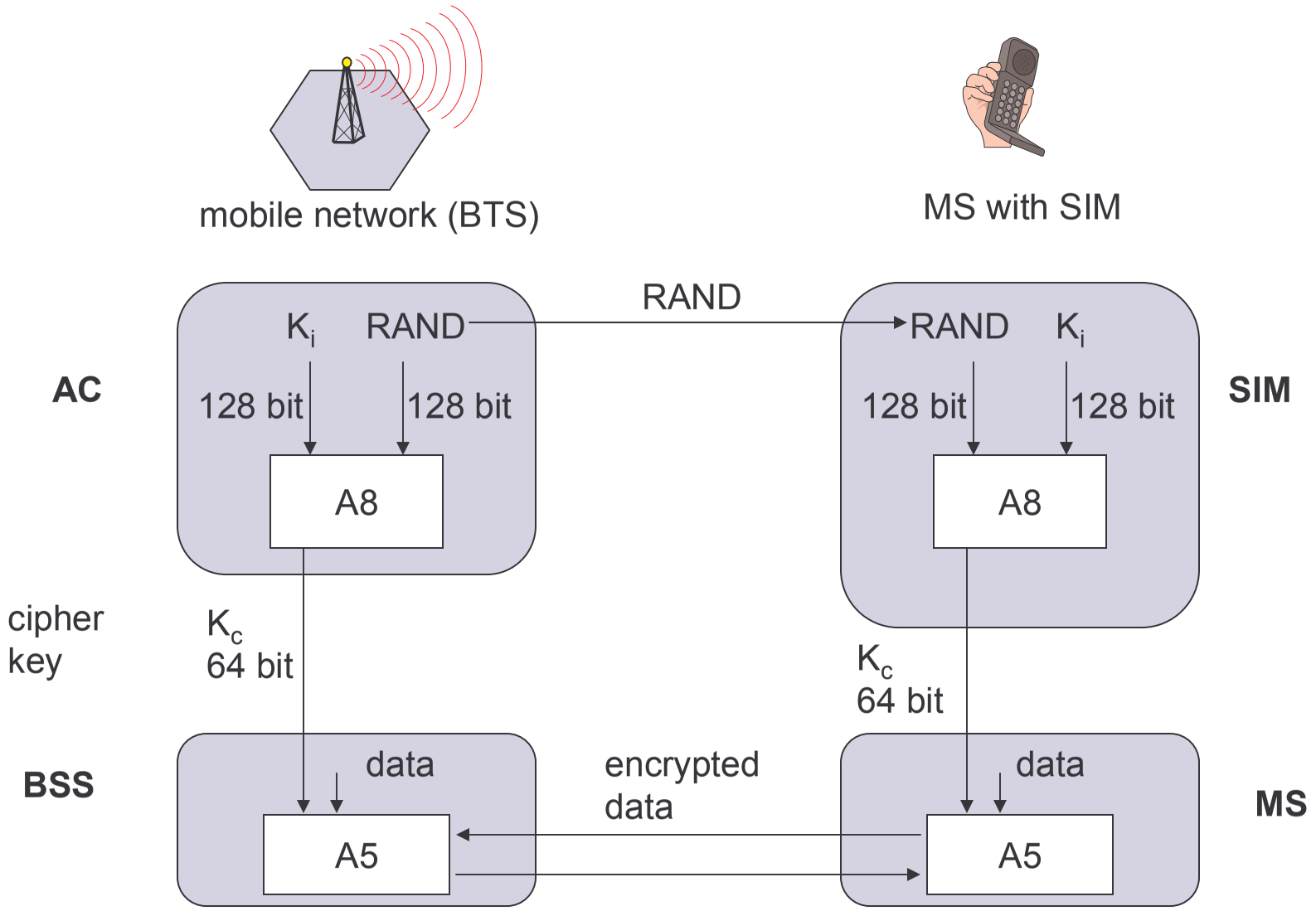

Data services in GSM I

- Data transmission standardized with only 9.6 kbit/s
  - advanced coding allows 14,4 kbit/s
  - not enough for Internet and multimedia applications
- HSCSD (High-Speed Circuit Switched Data)
  - mainly software update
  - bundling of several time-slots to get higher AIUR (Air Interface User Rate) (e.g., 57.6 kbit/s using 4 slots, 14.4 each)
  - advantage: ready to use, constant quality, simple
  - disadvantage: channels blocked for voice transmission

AIUR [kbit/s]	TCH/F4.8	TCH/F9.6	TCH/F14.4
4.8	1		
9.6	2	1	
14.4	3		1
19.2	4	2	
28.8		3	2
38.4		4	
43.2			3
57.6			4

Data services in GSM II

- GPRS (General Packet Radio Service)
  - packet switching
  - using free slots only if data packets ready to send (e.g., 50 kbit/s using 4 slots temporarily)
  - standardization 1998, introduction 2001
  - advantage: one step towards UMTS, more flexible
  - disadvantage: more investment needed (new hardware)
- GPRS network elements
  - GSN (GPRS Support Nodes): GGSN and SGSN
  - GGSN (Gateway GSN)
    - interworking unit between GPRS and PDN (Packet Data Network)
  - SGSN (Serving GSN)
    - supports the MS (location, billing, security)
  - GR (GPRS Register)
    - user addresses

GPRS quality of service

Reliability class	Lost SDU probability	Duplicate SDU probability	Out of sequence SDU probability	Corrupt SDU probability
1	10^{-9}	10^{-9}	10^{-9}	10^{-9}
2	10^{-4}	10^{-5}	10^{-5}	10^{-6}
3	10^{-2}	10^{-5}	10^{-5}	10^{-2}

Delay class	SDU size 128 byte		SDU size 1024 byte	
	mean	95 percentile	mean	95 percentile
1	< 0.5 s	< 1.5 s	< 2 s	< 7 s
2	< 5 s	< 25 s	< 15 s	< 75 s
3	< 50 s	< 250 s	< 75 s	< 375 s
4	unspecified			

Examples for GPRS device classes

Class	Receiving slots	Sending slots	Maximum number of slots
1	1	1	2
2	2	1	3
3	2	2	3
5	2	2	4
8	4	1	5
10	4	2	5
12	4	4	5

GPRS user data rates in kbit/s

Coding scheme	1 slot	2 slots	3 slots	4 slots	5 slots	6 slots	7 slots	8 slots
CS-1	9.05	18.1	27.15	36.2	45.25	54.3	63.35	72.4
CS-2	13.4	26.8	40.2	53.6	67	80.4	93.8	107.2
CS-3	15.6	31.2	46.8	62.4	78	93.6	109.2	124.8
CS-4	21.4	42.8	64.2	85.6	107	128.4	149.8	171.2

GPRS architecture and interfaces

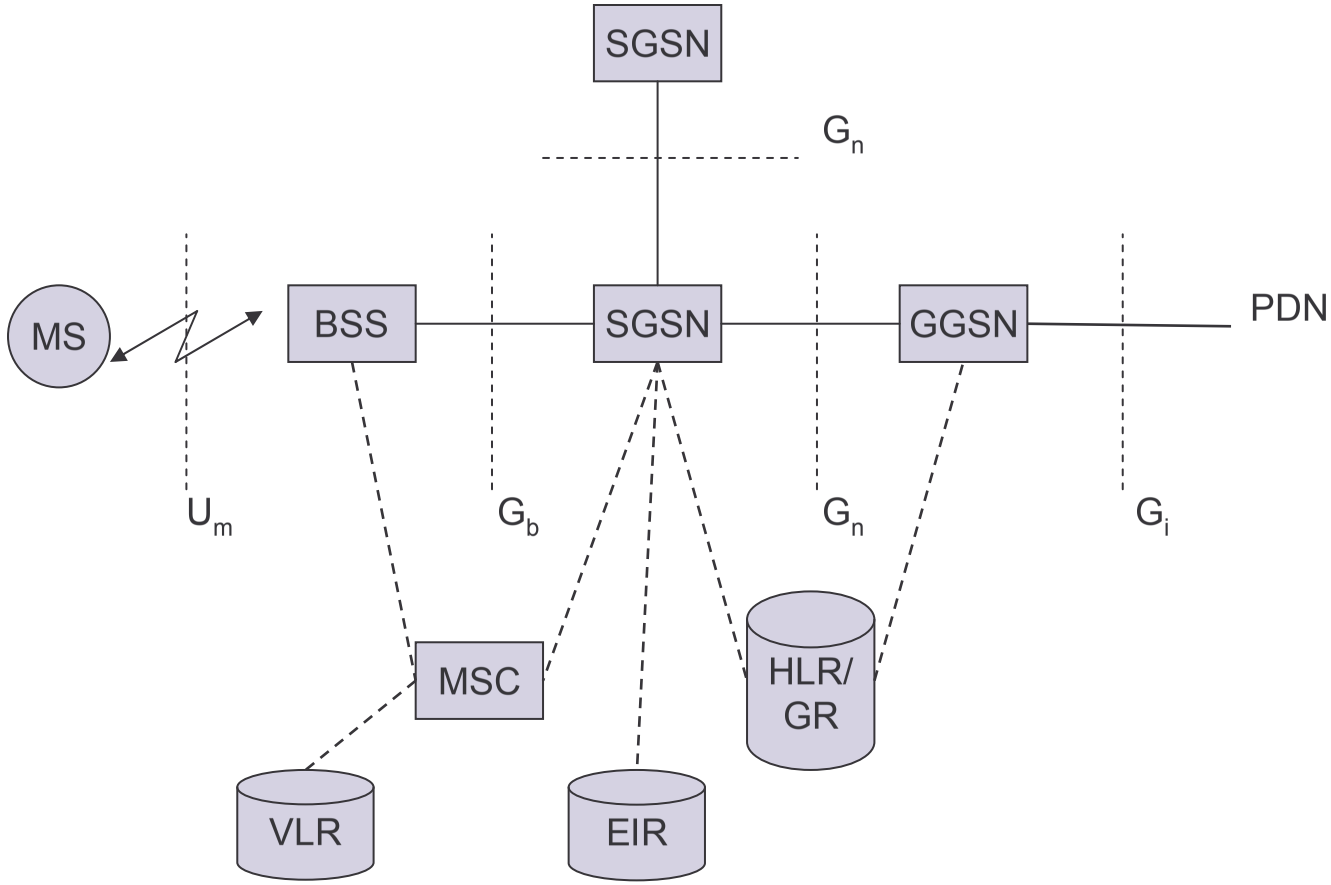

GPRS protocol architecture

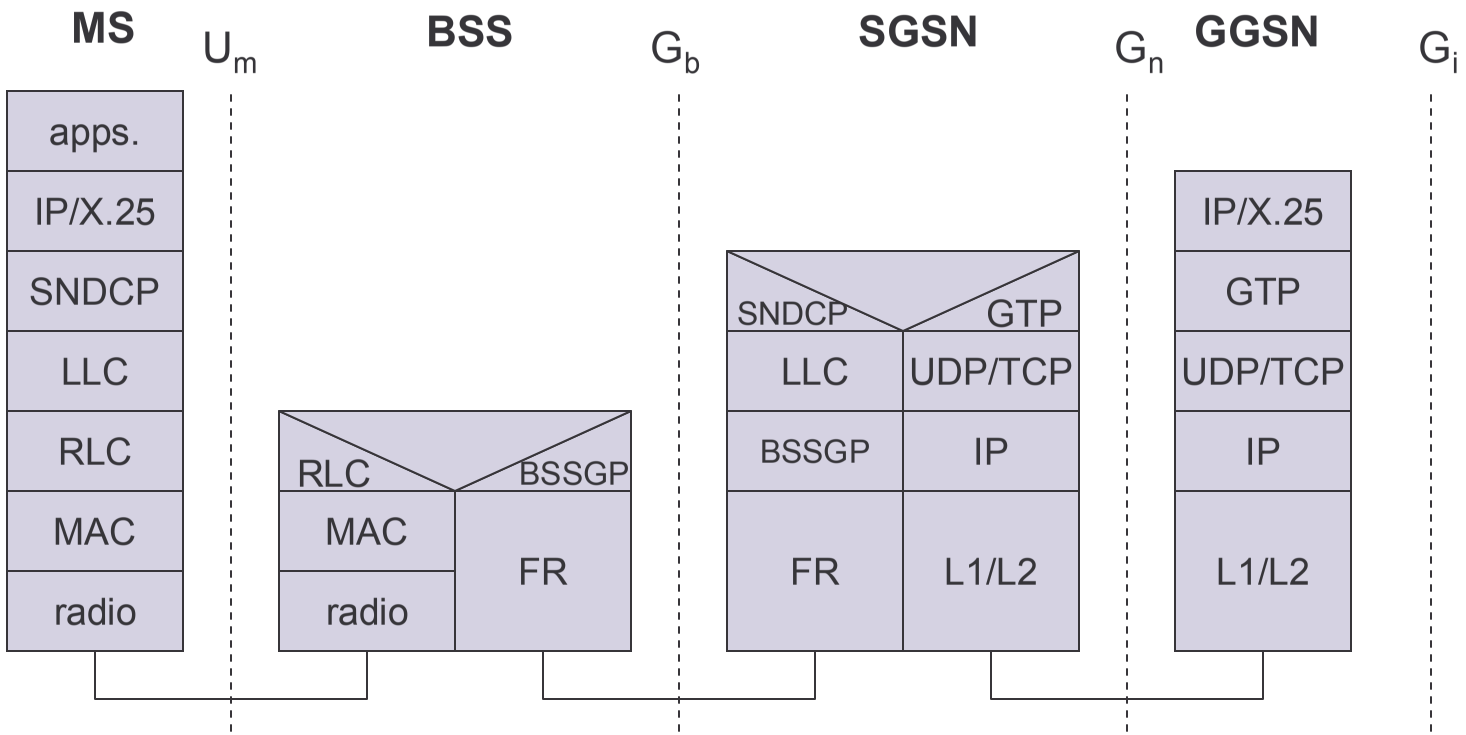

TETRA - Terrestrial Trunked Radio

- Trunked radio systems
  - many different radio carriers
  - assign single carrier for a short period to one user/group of users
  - taxi service, fleet management, rescue teams
  - interfaces to public networks, voice and data services
  - very reliable, fast call setup, local operation
- TETRA - ETSI standard
  - formerly: Trans European Trunked Radio
  - point-to-point and point-to-multipoint
  - encryption (end-to-end, air interface), authentication of devices, users and networks
  - group call, broadcast, sub-second group-call setup
  - ad-hoc ("direct mode"), relay and infrastructure networks
  - call queuing with pre-emptive priorities

TETRA – Contracts by Sector(percentage)

Used in over 70 countries, more than 20 device manufacturers

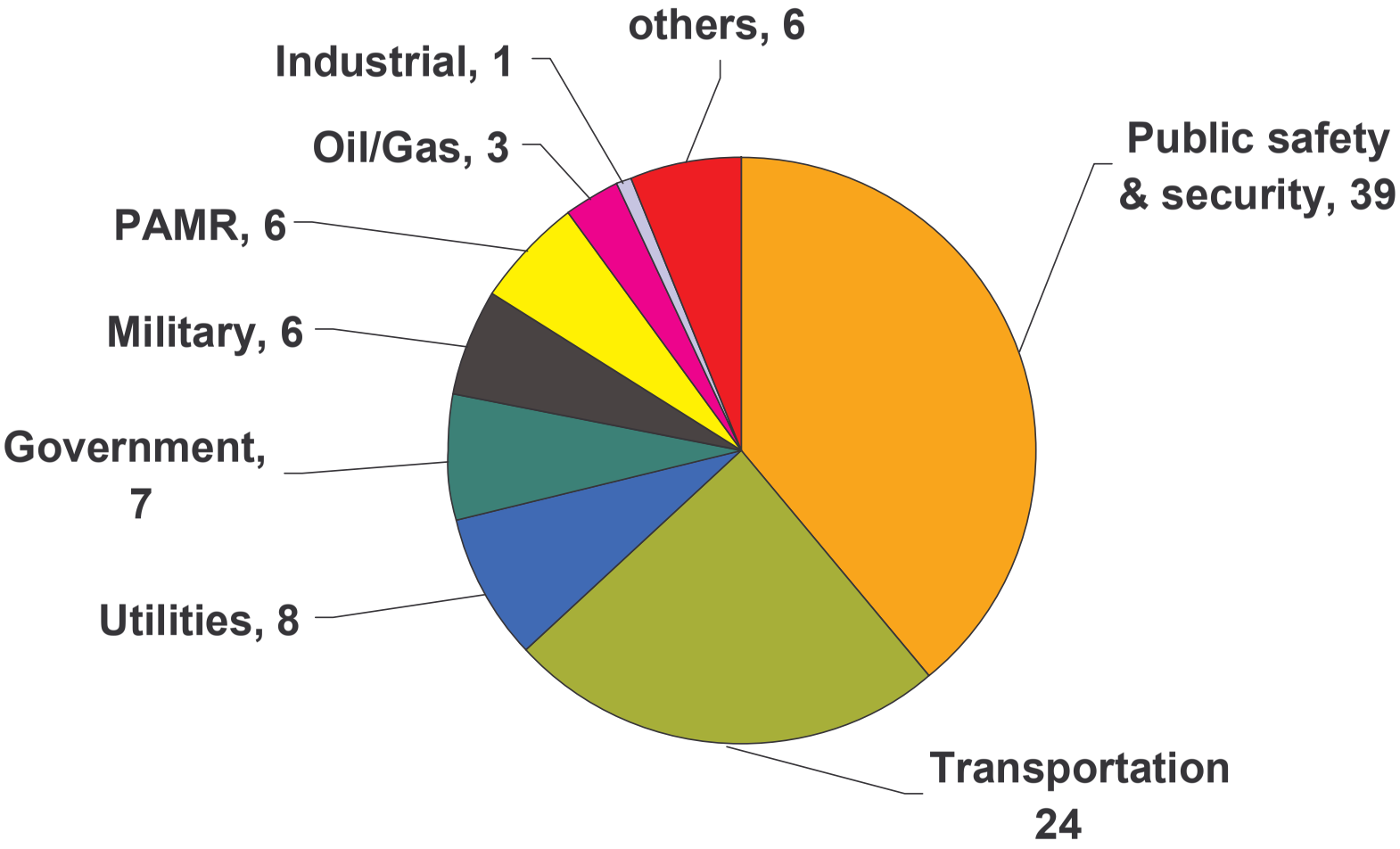

TETRA – Network Architecture

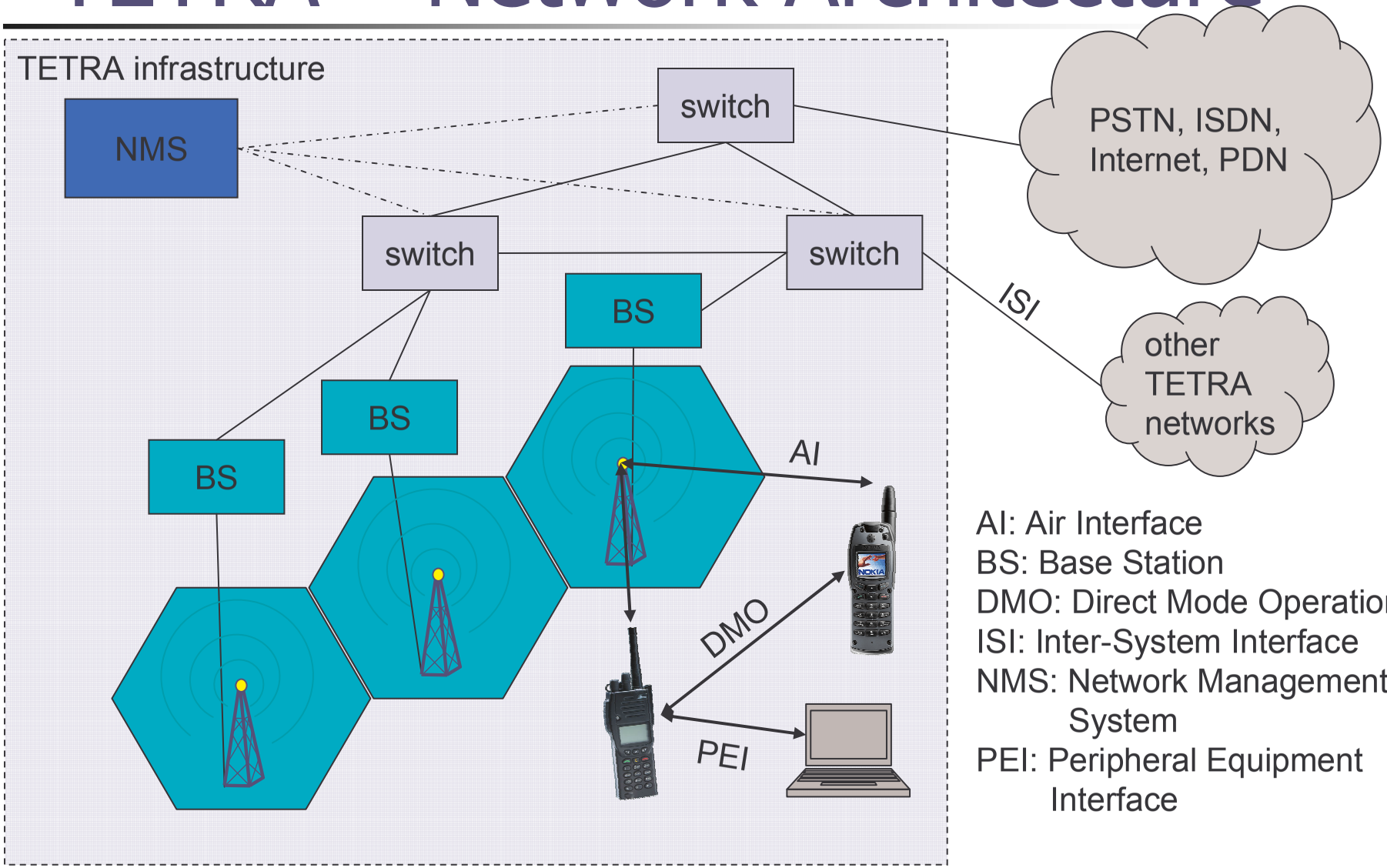

AI: Air Interface
BS: Base Station
DMO: Direct Mode Operation
ISI: Inter-System Interface
NMS: Network Management System
PEI: Peripheral Equipment Interface

TETRA – Direct Mode I

- Direct Mode enables ad-hoc operation and is one of the most important differences to pure infrastructure-based networks such as GSM, cdma2000 or UMTS.

Individual Call

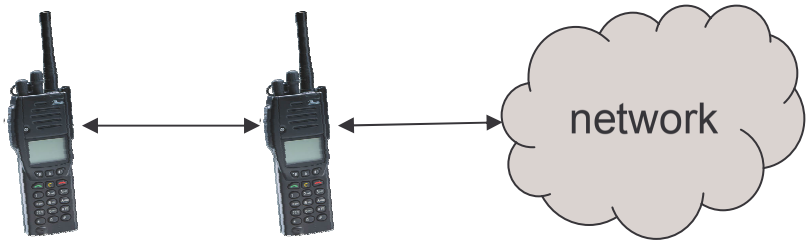

"Dual Watch" – alternating participation in Infrastructure and ad-hoc

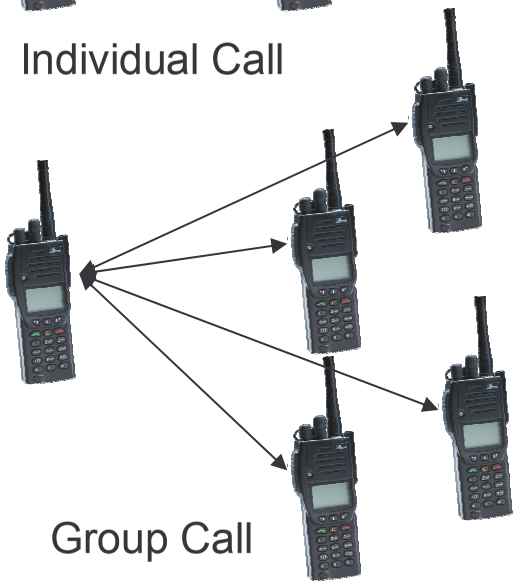

Group Call

Managed Direct Mode

TETRA – Direct Mode II

- An additional repeater may increase the transmission range (e.g. police car)

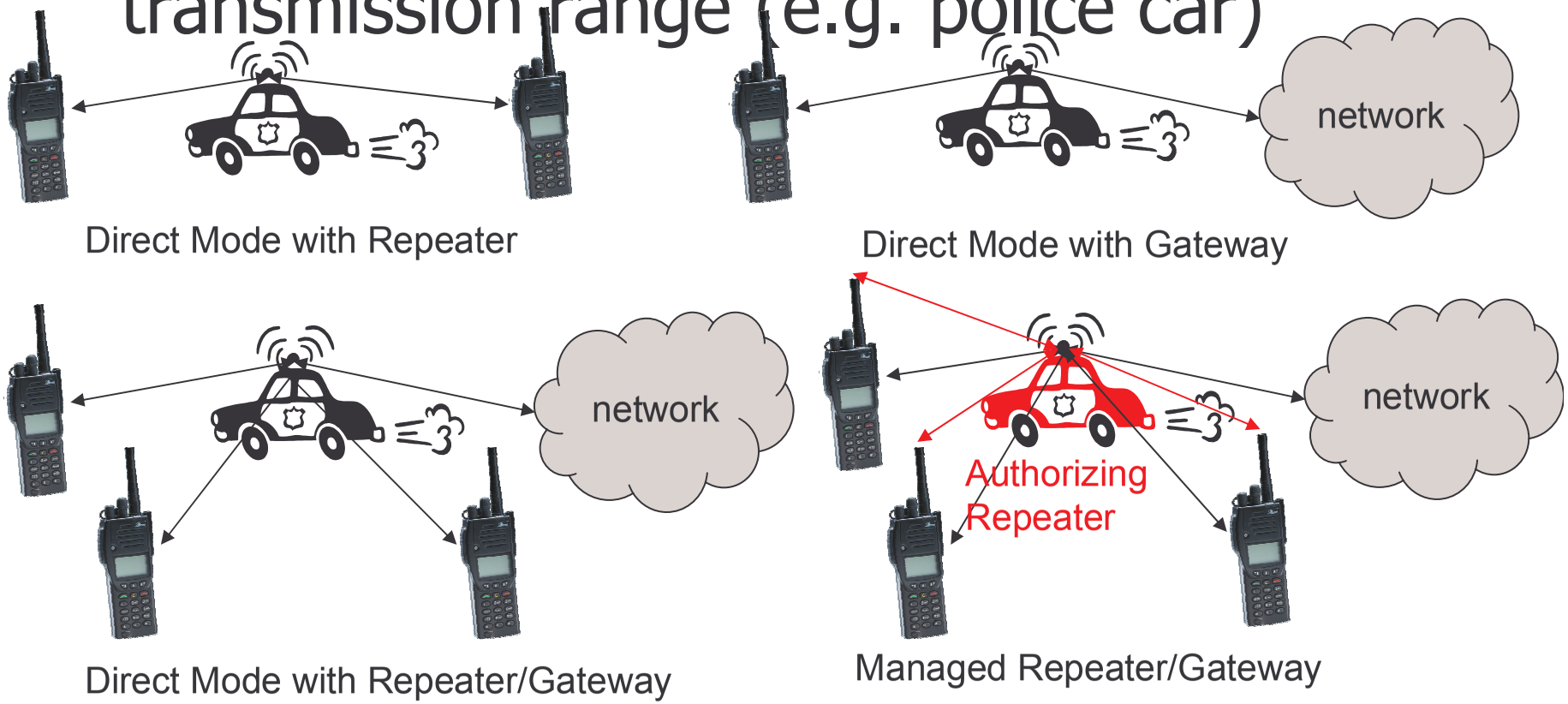

Direct Mode with Repeater

Direct Mode with Gateway

Direct Mode with Repeater/Gateway

Managed Repeater/Gateway

TETRA – Technology

- Services
  - Voice+Data (V+D) and Packet Data Optimized (PDO)
  - Short data service (SDS)

- Frequencies
  - Duplex: FDD, Modulation: DQPSK
  - Europe (in MHz, not all available yet)
    - 380-390 UL / 390-400 DL; 410-420 UL / 420-430 DL, 450-460 UL / 460-470 DL; 870-876 UL / 915-921 DL
  - Other countries
    - 380-390 UL / 390-400 DL; 410-420 UL / 420-430 DL, 806-821 UL / 851-866 DL

TDMA structure of the voice+data system

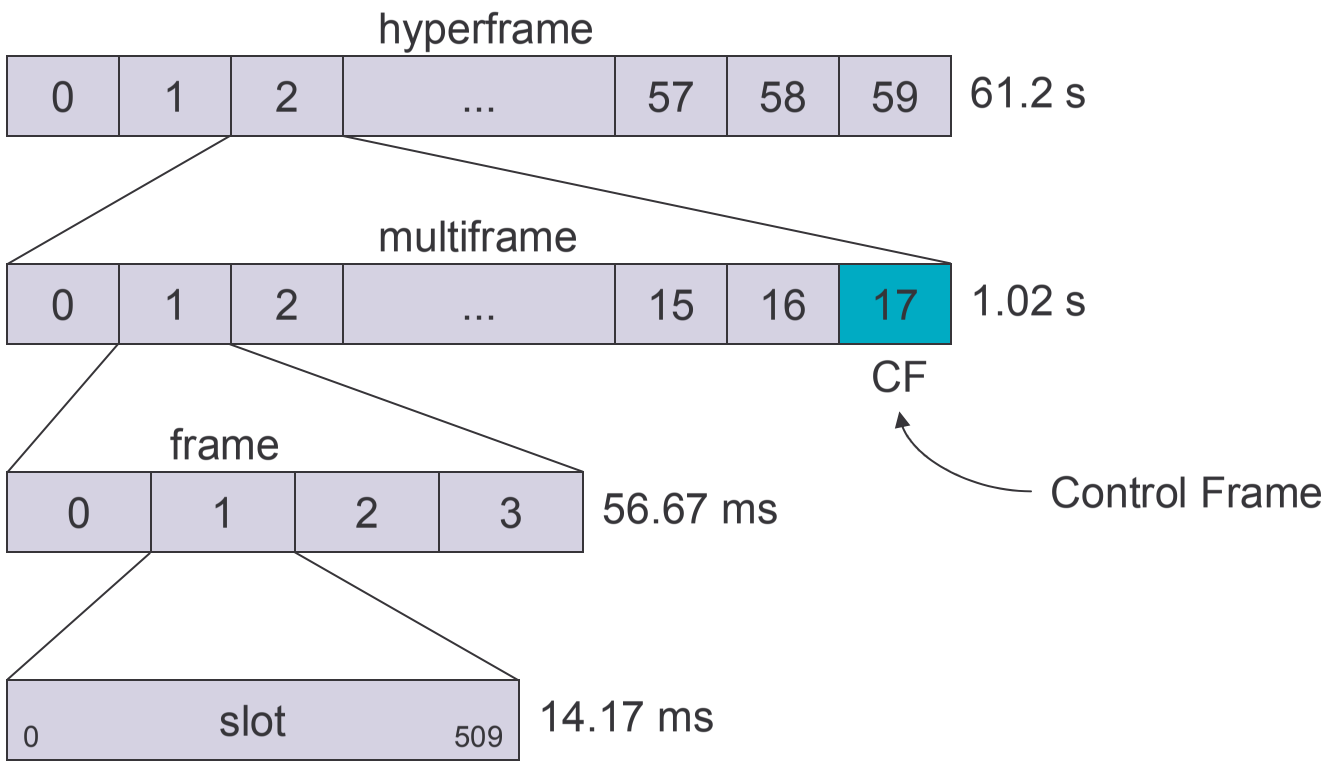

TETRA – Data Rates

- Infrastructure mode, V+D in kbit/s

No. of time slots	1	2	3	4
No protection	7.2	14.4	21.6	28.8
Low protection	4.8	9.6	14.4	19.2
High protection	2.4	4.8	7.2	9.6

- TETRA Release 2 – Supporting higher data rates
  - TEDS (TETRA Enhanced Data Service)
  - up to 100 kbit/s
  - backward compatibility

UMTS and IMT-2000

- Proposals for IMT-2000 (International Mobile Telecommunications)
  - UWC-136, cdma2000, WP-CDMA
  - UMTS (Universal Mobile Telecommunications System) from ETSI
- UMTS
  - UTRA (was: UMTS, now: Universal Terrestrial Radio Access)
  - enhancements of GSM
    - EDGE (Enhanced Data rates for GSM Evolution): GSM up to 384 kbit/s
    - CAMEL (Customized Application for Mobile Enhanced Logic)
    - VHE (virtual Home Environment)
  - fits into GMM (Global Multimedia Mobility) initiative from ETSI
  - requirements
    - min. 144 kbit/s rural (goal: 384 kbit/s)
    - min. 384 kbit/s suburban (goal: 512 kbit/s)
    - up to 2 Mbit/s urban

Frequencies for IMT-2000

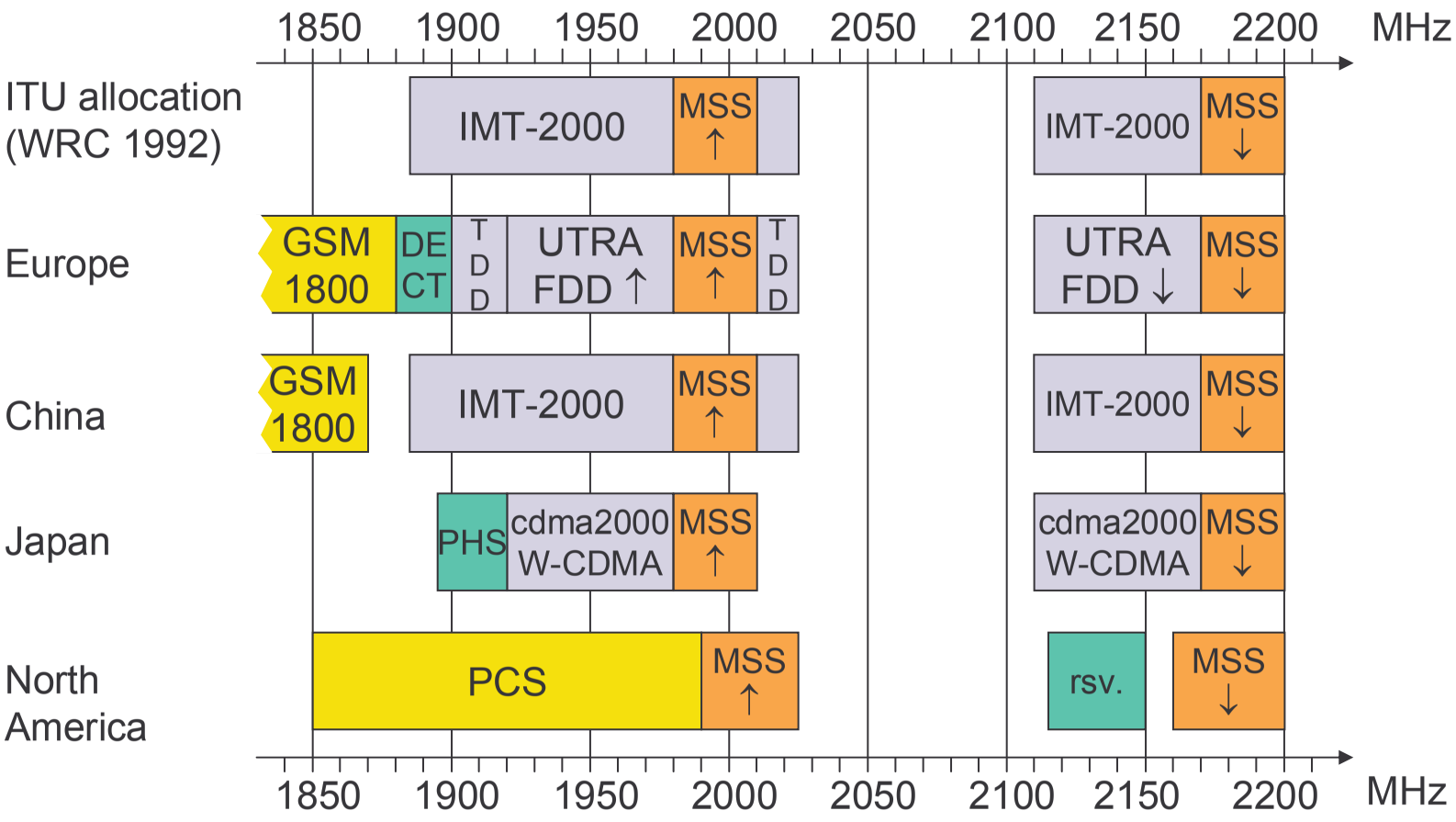

IMT-2000 family

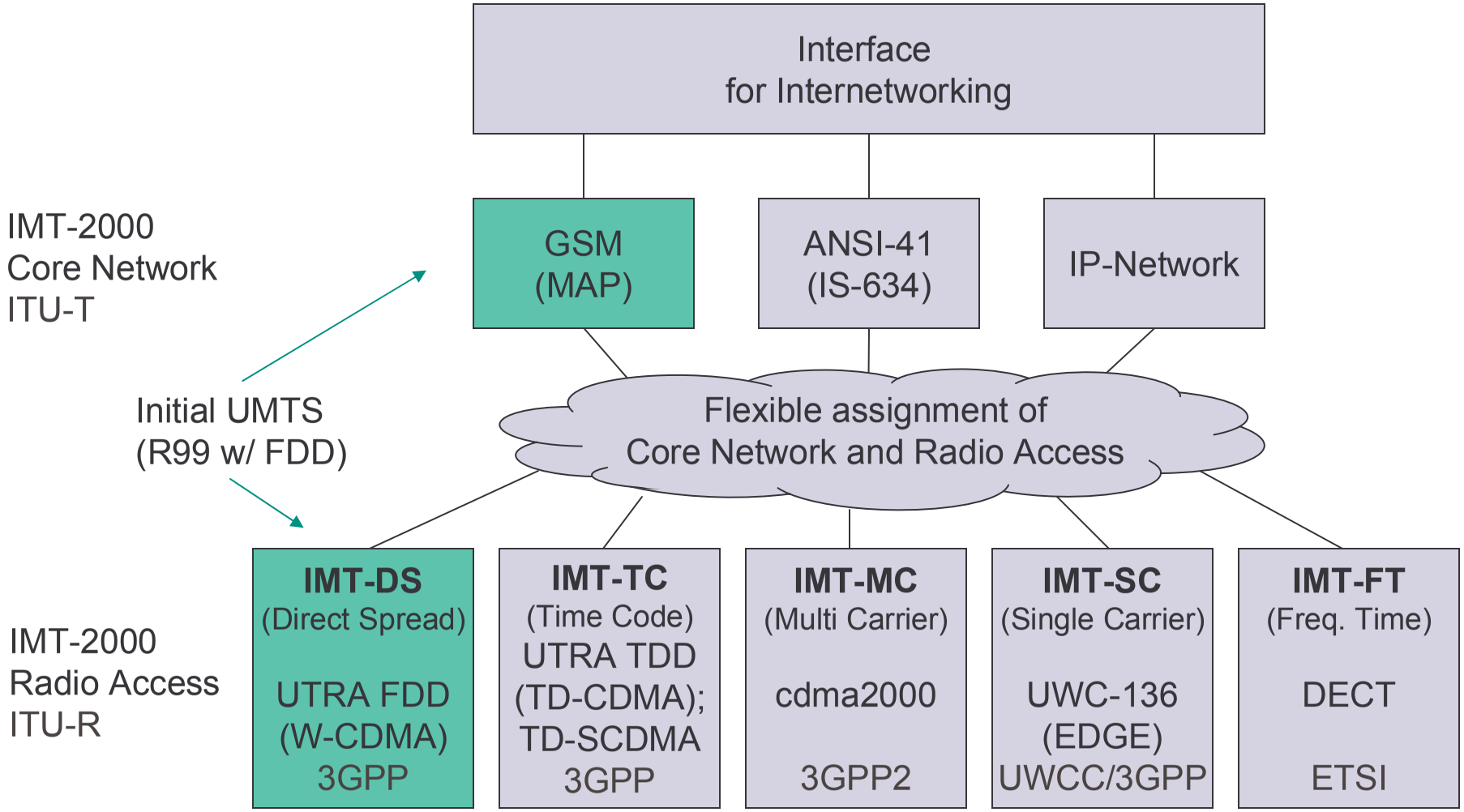

GSM and UMTS Releases

GSM/EDGE Release	3G Release	Abbreviated name	Spec version number	Freeze date (indicative only)
Phase 2+ Release 6	Release 6	Rel-6	6.x.y	December 2004 - March 2005
Phase 2+ Release 5	Release 5	Rel-5	5.x.y	March - June 2002
Phase 2+ Release 4	Release 4	Rel-4	4.x.y	March 2001
-	Release 2000	R00	4.x.y	Renaming…
Phase 2+ Release 2000	-		9.x.y	
-	Release 1999	R99	3.x.y	March 2000
Phase 2+ Release 1999	-		8.x.y	
Phase 2+ Release 1998	-	R98	7.x.y	early 1999
Phase 2+ Release 1997	-	R97	6.x.y	early 1998
Phase 2+ Release 1996	-	R96	5.x.y	early 1997
Phase 2	-	Ph2	4.x.y	1995
Phase 1	-	Ph1	3.x.y	1992

Licensing Example: UMTS in Germany, 18. Aug 2000

STAND DER LIZENZVERGABE

Versteigerung UMTS/IMT-2000-Lizenzen

Runde 173 Datum 17.08.00 Uhrzeit 15:51:26

Höchstgebote für Frequenzblöcke (mind. 2 Blöcke erforderlich für Lizenz)

Bieter	Anzahl der Frequenzblöcke 1	2	3	Lizenzgebot (TDM)	(€ in Tsd)
E-Plus Hutchison	2 x 5 MHz	2 x 5 MHz		16.418.200	8.394.492
Group 3G	2 x 5 MHz	2 x 5 MHz		16.446.000	8.408.706
Mannesmann Mobilfunk	2 x 5 MHz	2 x 5 MHz		16.473.800	8.422.920
MobilCom Multimedia	2 x 5 MHz	2 x 5 MHz		16.370.000	8.369.848
T-Mobil	2 x 5 MHz	2 x 5 MHz		16.582.200	8.478.344
VIAG Interkom	2 x 5 MHz	2 x 5 MHz		16.517.000	8.445.008
debitel Multimedia	ausgeschieden				
Lizenzsumme				98.807.200	50.519.319

RUNDENERGEBNIS

Versteigerung UMTS/IMT-2000-Frequenzen

Runde: 9

Lfd. Nr.	Umfang	Höchstbieter	Höchstgebot (TDM)	Höchstgebot* (€ in Tsd)
13	1 x 5 MHz konkret	E-Plus Hutchison	73.600	37.631
14	1 x 5 MHz	MobilCom Multimedia	121.000	61.866
15	1 x 5 MHz	T-Mobil	122.700	62.736
16	1 x 5 MHz	Mannesmann Mobilfunk	121.000	61.866
17	1 x 5 MHz	Group 3G	122.700	62.736
		Summe Höchstgebote	561.000	286.835

* Eurowerte gerundet

VIAG Interkom ausgeschieden

- UTRA-FDD:
  - Uplink 1920-1980 MHz
  - Downlink 2110-2170 MHz
  - duplex spacing 190 MHz
  - 12 channels, each 5 MHz
- UTRA-TDD:
  - 1900-1920 MHz,
  - 2010-2025 MHz;
  - 5 MHz channels
- Coverage of the population
  - 25% until 12/2003
  - 50% until 12/2005

Sum: 50.81 billion €

UMTS architecture (Release 99 used here!)

- UTRAN (UTRA Network)
  - Cell level mobility
  - Radio Network Subsystem (RNS)
  - Encapsulation of all radio specific tasks
- UE (User Equipment)
- CN (Core Network)
  - Inter system handover
  - Location management if there is no dedicated connection between UE and UTRAN

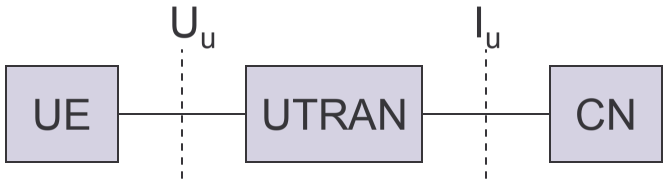

UMTS domains and interfaces I

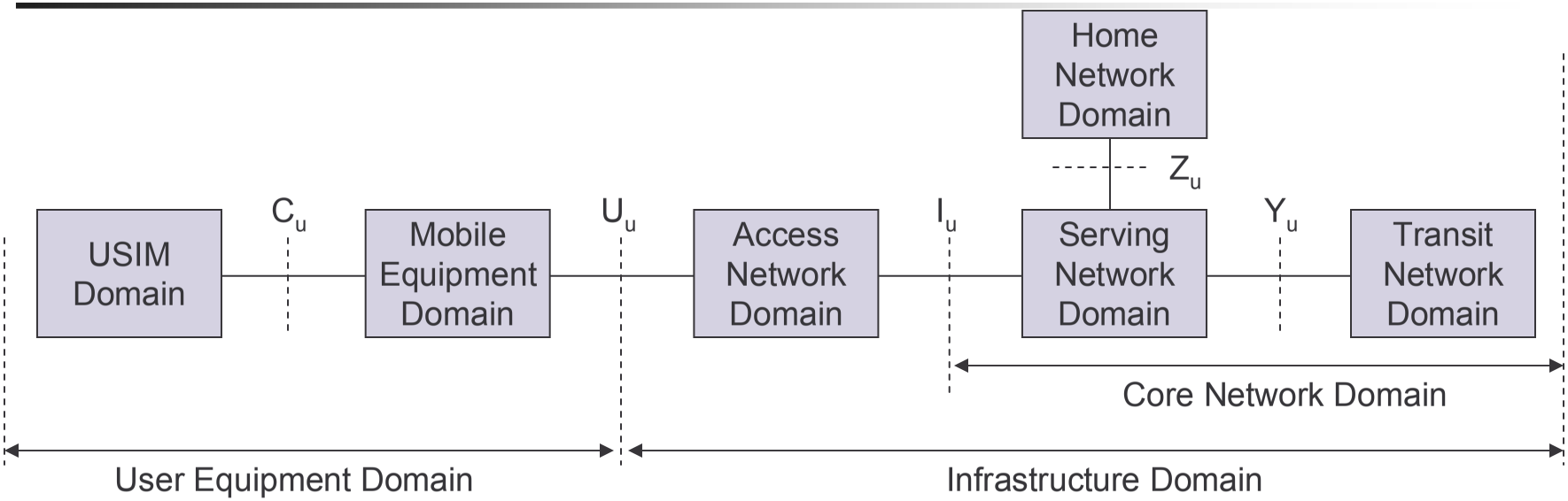

- User Equipment Domain
  - Assigned to a single user in order to access UMTS services
- Infrastructure Domain
  - Shared among all users
  - Offers UMTS services to all accepted users

UMTS domains and interfaces II

- Universal Subscriber Identity Module (USIM)
  - Functions for encryption and authentication of users
  - Located on a SIM inserted into a mobile device
- Mobile Equipment Domain
  - Functions for radio transmission
  - User interface for establishing/maintaining end-to-end connections
- Access Network Domain
  - Access network dependent functions
- Core Network Domain
  - Access network independent functions
  - Serving Network Domain
    - Network currently responsible for communication
  - Home Network Domain
    - Location and access network independent functions

Spreading and scrambling of user data

- Constant chipping rate of 3.84 Mchip/s
- Different user data rates supported via different spreading factors
  - higher data rate: less chips per bit and vice versa
- User separation via unique, quasi orthogonal scrambling codes
  - users are not separated via orthogonal spreading codes
  - much simpler management of codes: each station can use the same orthogonal spreading codes
  - precise synchronisation not necessary as the scrambling codes stay quasi-orthogonal

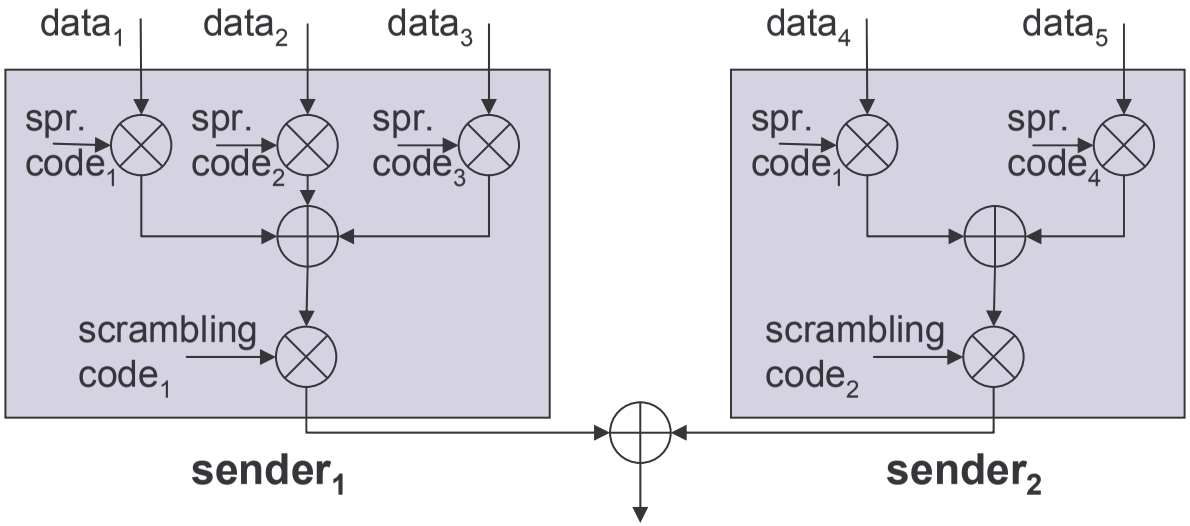

UMTS FDD frame structure

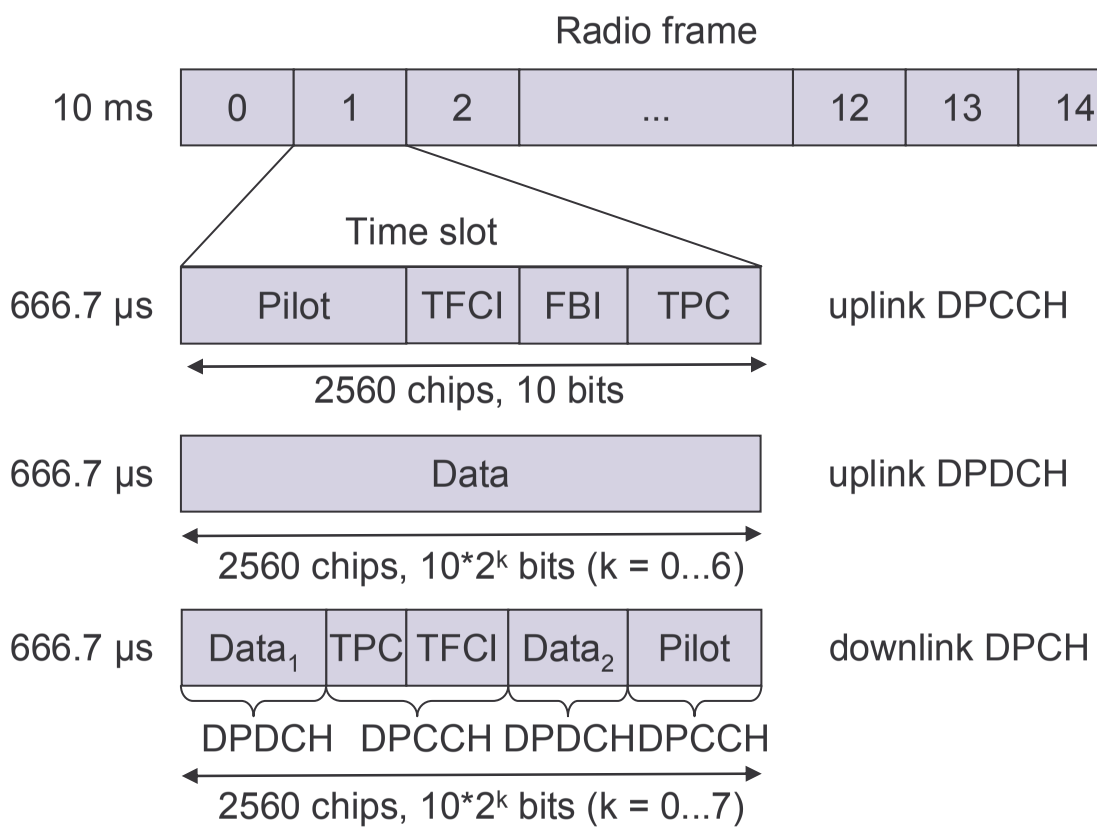

Slot structure NOT for user separation but synchronisation for periodic functions!

W-CDMA

- 1920-1980 MHz uplink
- 2110-2170 MHz downlink
- chipping rate: 3.840 Mchip/s
- soft handover
- QPSK
- complex power control (1500 power control cycles/s)
- spreading: UL: 4-256; DL:4-512

FBI: Feedback Information
TPC: Transmit Power Control
TFCI: Transport Format Combination Indicator
DPCCH: Dedicated Physical Control Channel
DPDCH: Dedicated Physical Data Channel
DPCH: Dedicated Physical Channel

Typical UTRA-FDD uplink data rates

User data rate [kbit/s]	**12.2 (voice)**	**64**	**144**	**384**
DPDCH [kbit/s]	60	240	480	960
DPCCH [kbit/s]	15	15	15	15
Spreading	64	16	8	4

UMTS TDD frame structure (burst type 2)

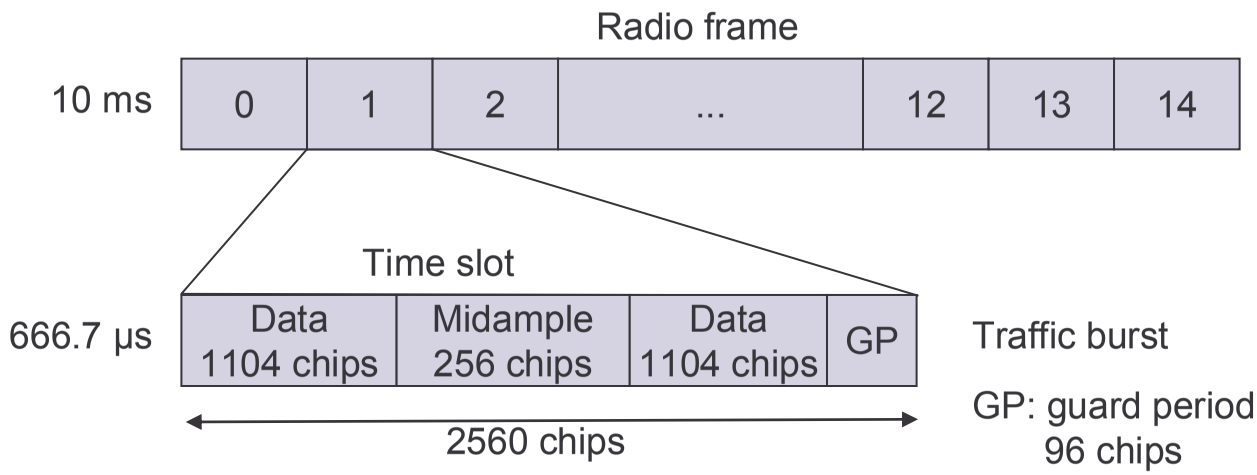

TD-CDMA

- 2560 chips per slot
- spreading: 1-16
- symmetric or asymmetric slot assignment to UL/DL (min. 1 per direction)
- tight synchronisation needed
- simpler power control (100-800 power control cycles/s)

UTRAN architecture

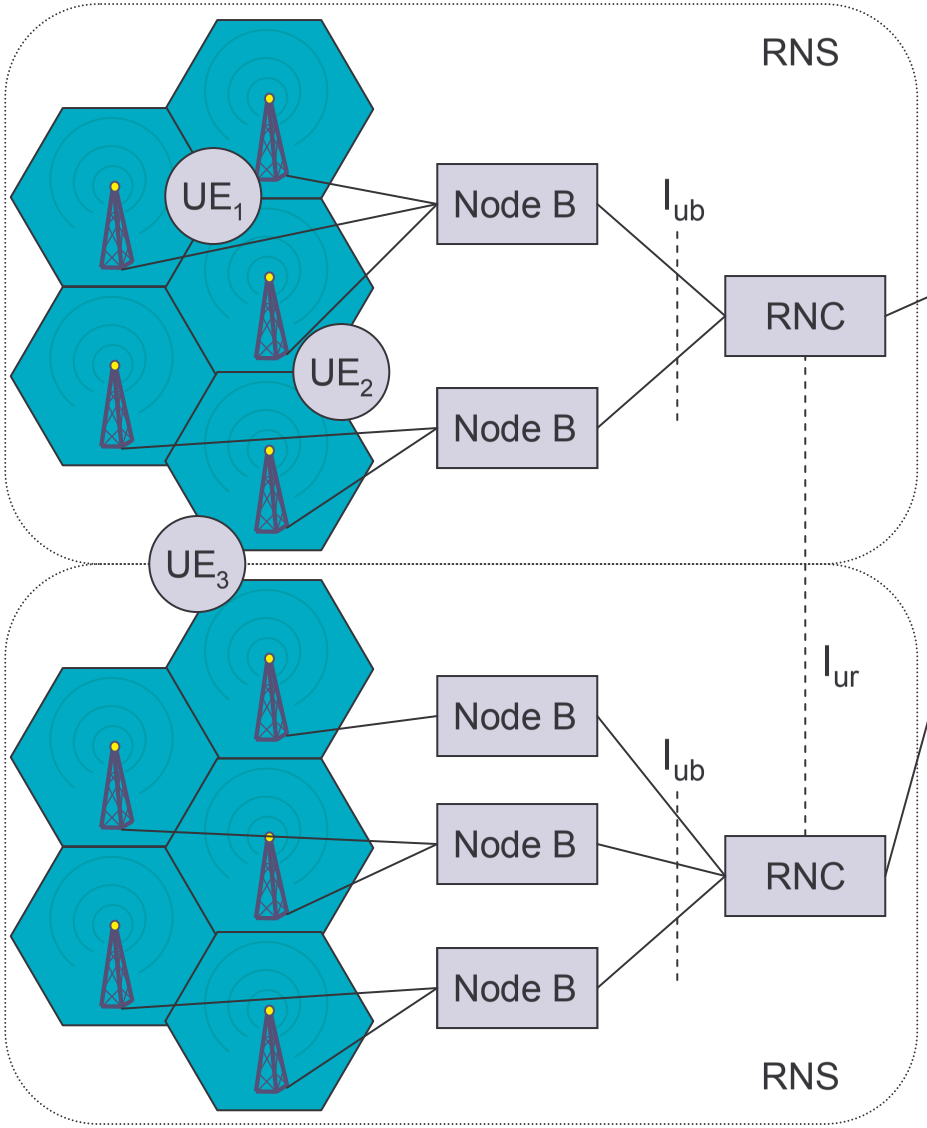

RNC: Radio Network Controller

RNS: Radio Network Subsystem

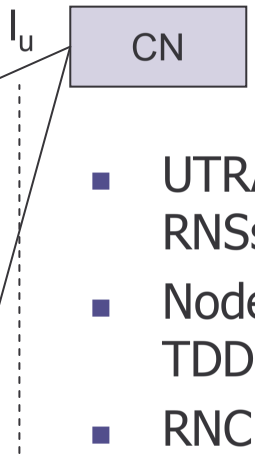

- UTRAN comprises several RNSs
- Node B can support FDD or TDD or both
- RNC is responsible for handover decisions requiring signalingto the UE
- Cell offers FDD or TDD

UTRAN architecture

RNC: Radio Network Controller

RNS: Radio Network Subsystem

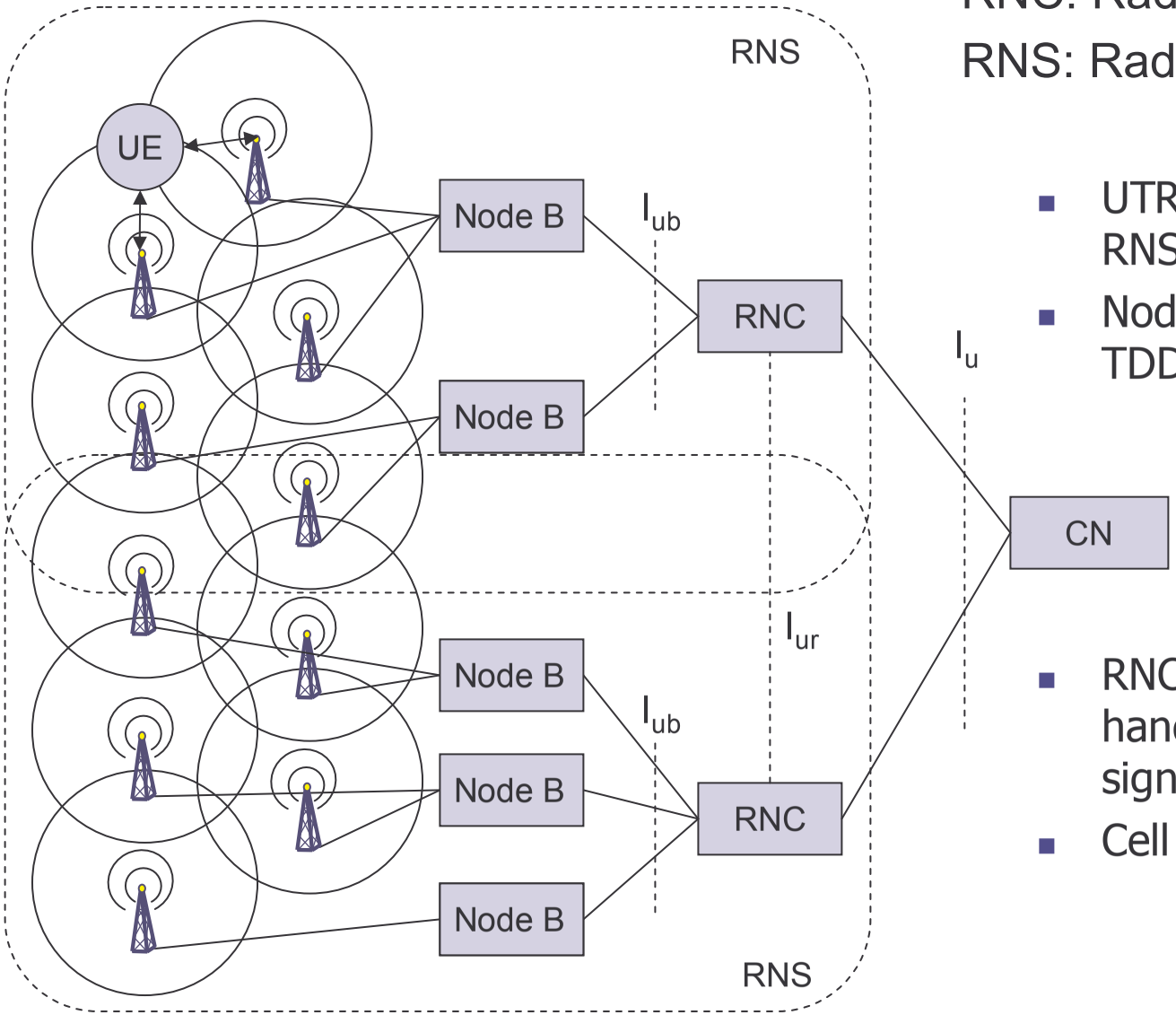

- UTRAN comprises several RNSs
- Node B can support FDD or TDD or both

- RNC is responsible for handover decisions requiring signaling to the UE
- Cell offers FDD or TDD

UTRAN functions

- Admission control
- Congestion control
- System information broadcasting
- Radio channel encryption
- Handover
- SRNS moving
- Radio network configuration
- Channel quality measurements
- Macro diversity
- Radio carrier control

Core network: protocols

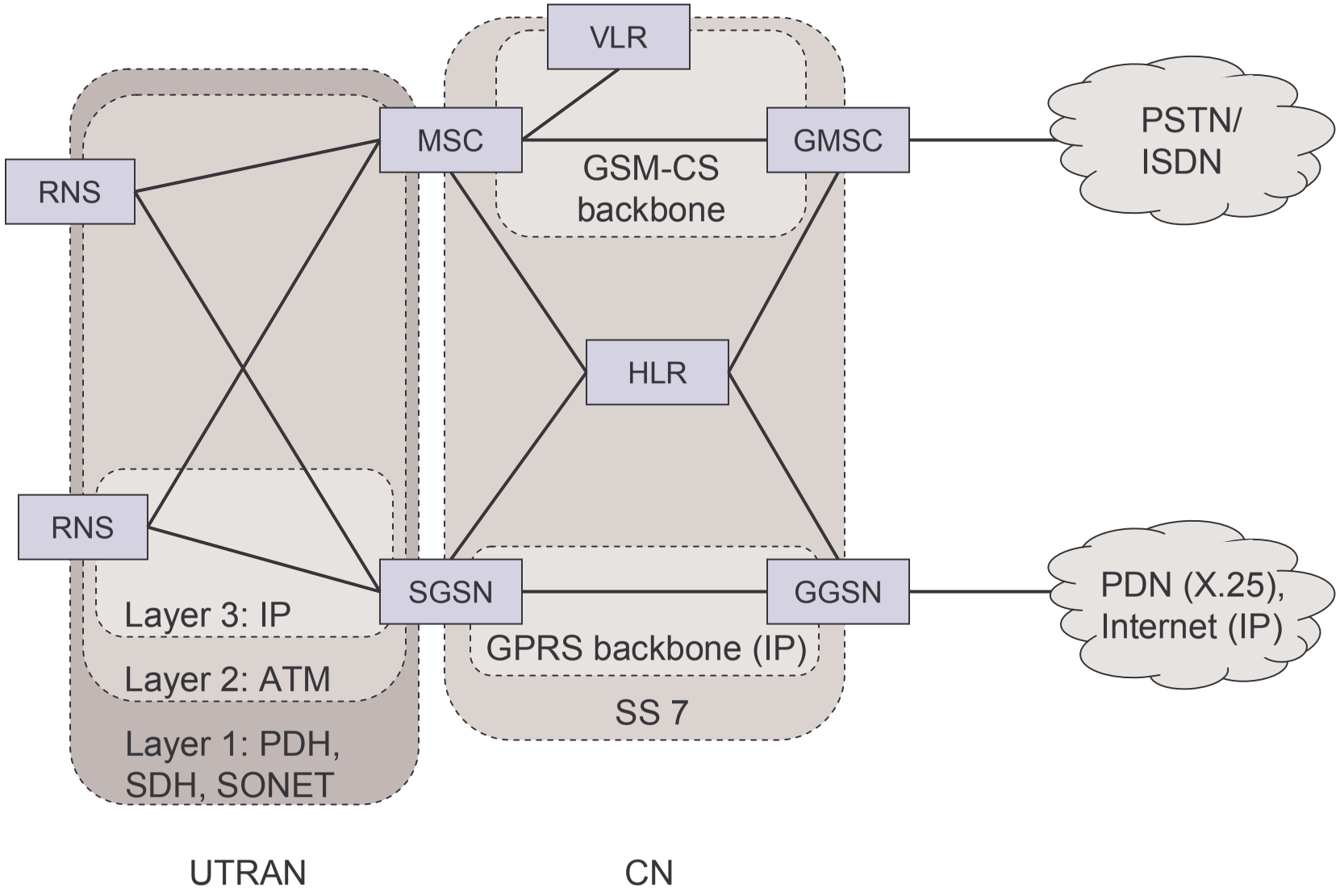

Core network: architecture

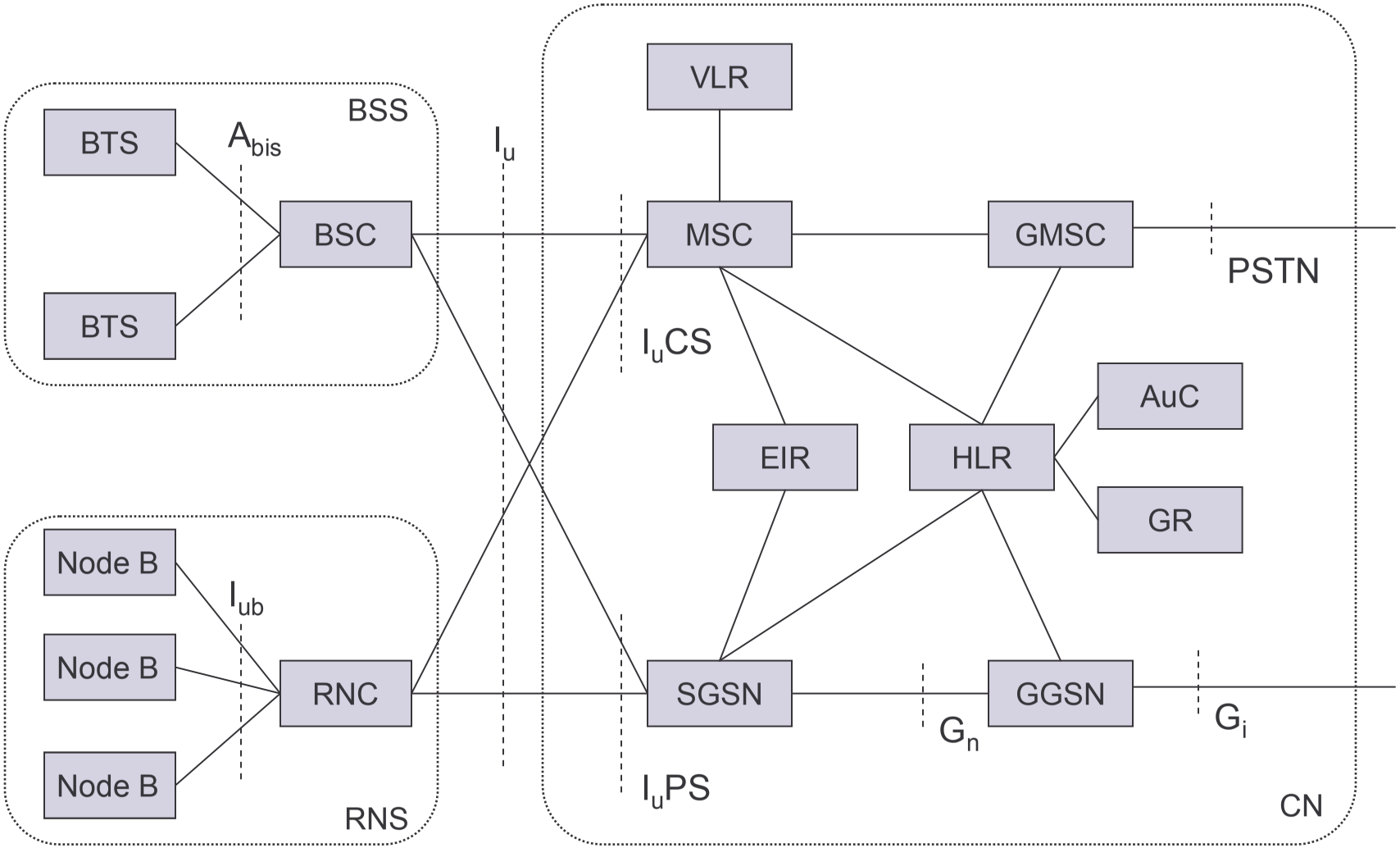

Core network

- The Core Network (CN) and thus the Interface I_u, too, are separated into two logical domains:
- Circuit Switched Domain (CSD)
  - Circuit switched service incl. signaling
  - Resource reservation at connection setup
  - GSM components (MSC, GMSC, VLR)
  - I_uCS
- Packet Switched Domain (PSD)
  - GPRS components (SGSN, GGSN)
  - I_uPS

- Release 99 uses the GSM/GPRS network and adds a new radio access!
  - Helps to save a lot of money …
  - Much faster deployment
  - Not as flexible as newer releases (5, 6)

UMTS protocol stacks (user plane)

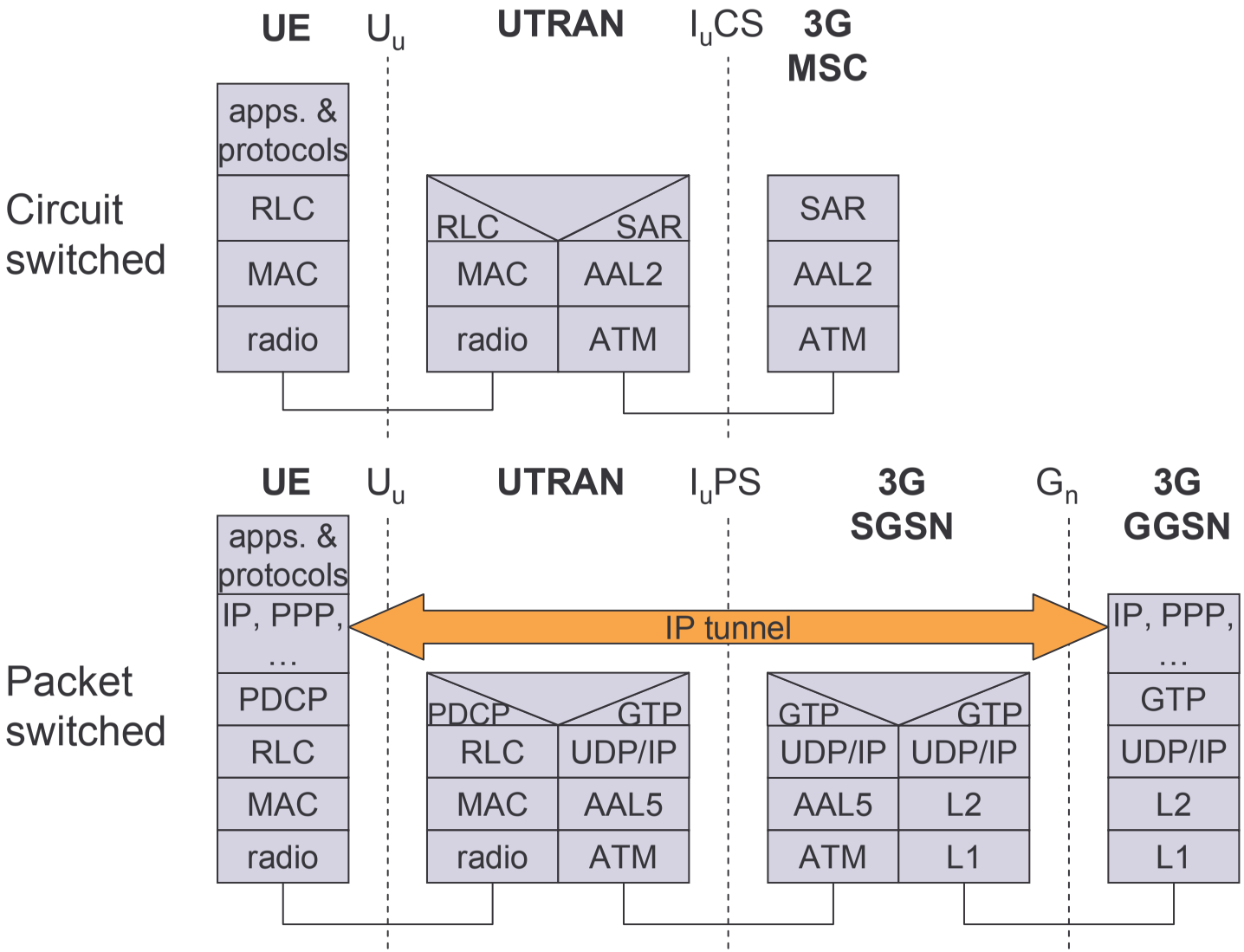

Support of mobility: macro diversity

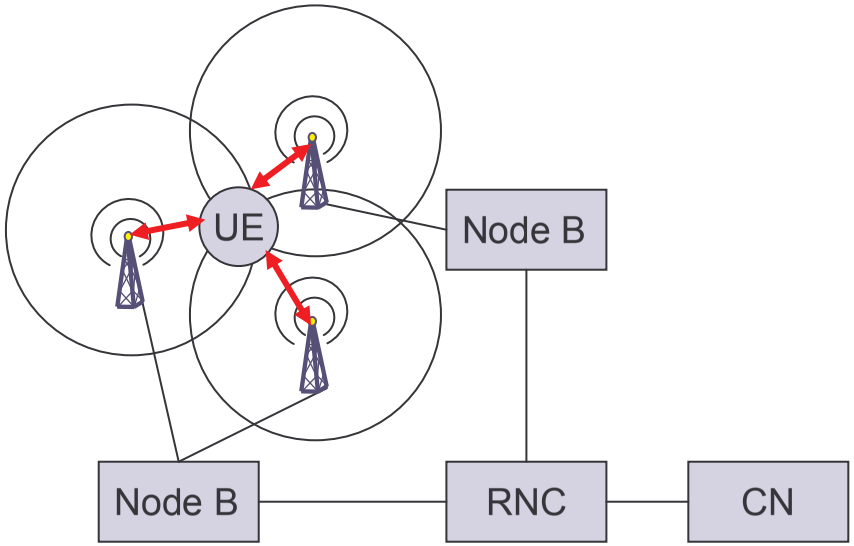

- Multicasting of data via several physical channels
  - Enables soft handover
  - FDD mode only
- Uplink
  - simultaneous reception of UE data at several Node Bs
  - Reconstruction of data at Node B, SRNC or DRNC
- Downlink
  - Simultaneous transmission of data via different cells
  - Different spreading codes in different cells

Support of mobility: handover

- From and to other systems (e.g., UMTS to GSM)
  - This is a must as UMTS coverage will be poor in the beginning
- RNS controlling the connection is called SRNS (Serving RNS)
- RNS offering additional resources (e.g., for soft handover) is called Drift RNS (DRNS)
- End-to-end connections between UE and CN only via I_u at the SRNS
  - Change of SRNS requires change of I_u
  - Initiated by the SRNS
  - Controlled by the RNC and CN

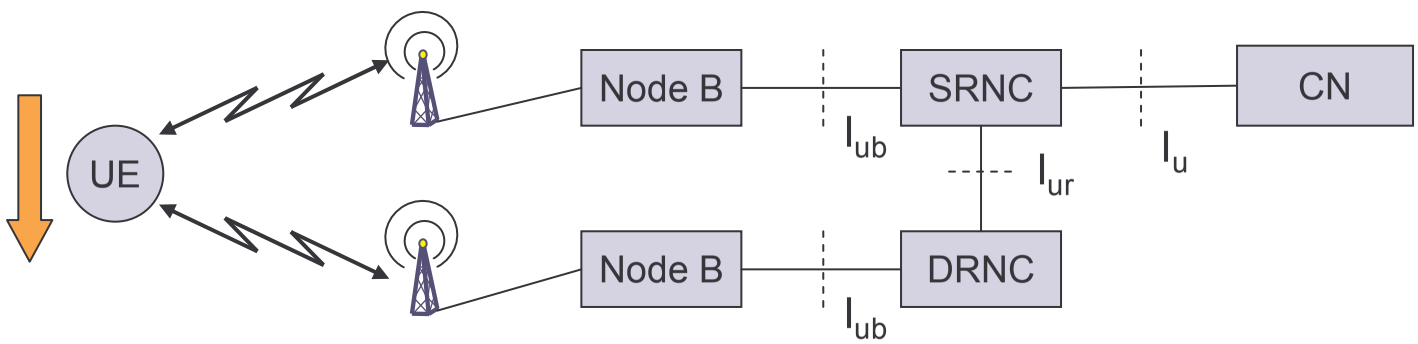

Example handover types in UMTS/GSM

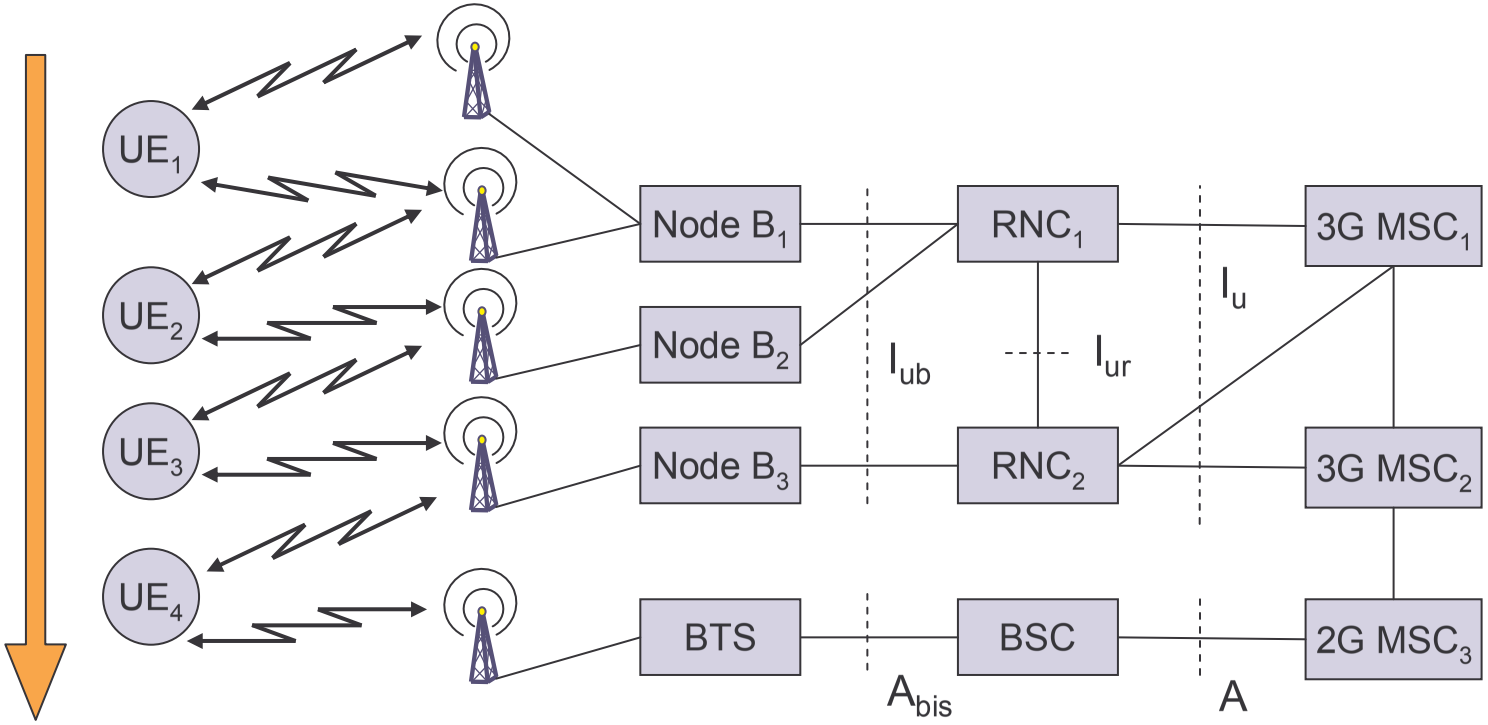

Breathing Cells

- GSM
  - Mobile device gets exclusive signal from the base station
  - Number of devices in a cell does not influence cell size

- UMTS
  - Cell size is closely correlated to the cell capacity
  - Signal-to-nose ratio determines cell capacity
  - Noise is generated by interference from
    - other cells
    - other users of the same cell
  - Interference increases noise level
  - Devices at the edge of a cell cannot further increase their output power (max. power limit) and thus drop out of the cell
    ⇨ no more communication possible
  - Limitation of the max. number of users within a cell required

  - Cell breathing complicates network planning

Breathing Cells: Example

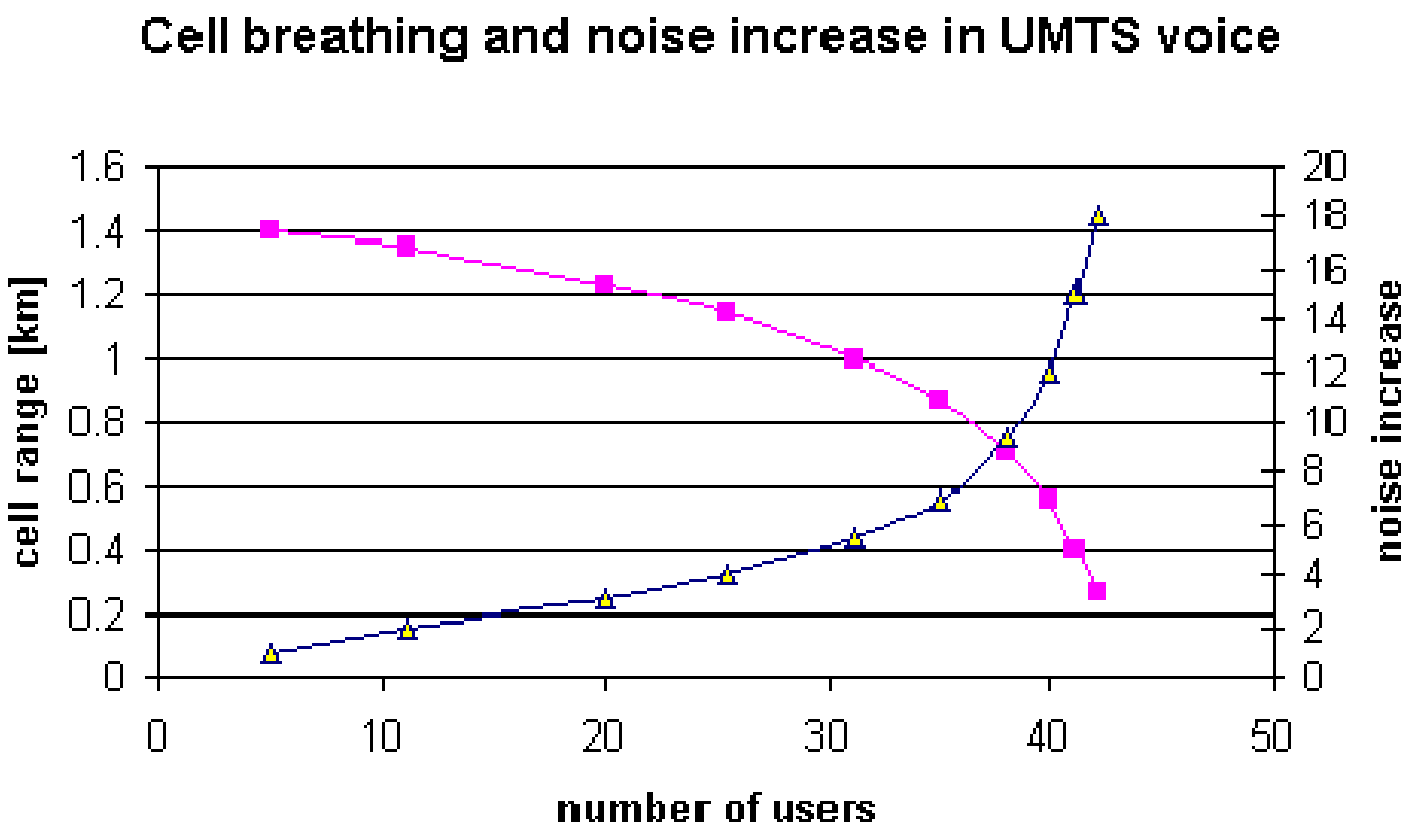

UMTS services (originally)

- Data transmission service profiles

Service Profile	Bandwidth	Transport mode	
High Interactive MM	128 kbit/s	Circuit switched	Bidirectional, video telephone
High MM	2 Mbit/s	Packet switched	Low coverage, max. 6 km/h
Medium MM	384 kbit/s	Circuit switched	asymmetrical, MM, downloads
Switched Data	14.4 kbit/s	Circuit switched	
Simple Messaging	14.4 kbit/s	Packet switched	SMS successor, E-Mail
Voice	16 kbit/s	Circuit switched	

- Virtual Home Environment (VHE)
  - Enables access to personalized data independent of location, access network, and device
  - Network operators may offer new services without changing the network
  - Service providers may offer services based on components which allow the automatic adaptation to new networks and devices
  - Integration of existing IN services

Example 3G Networks: Japan

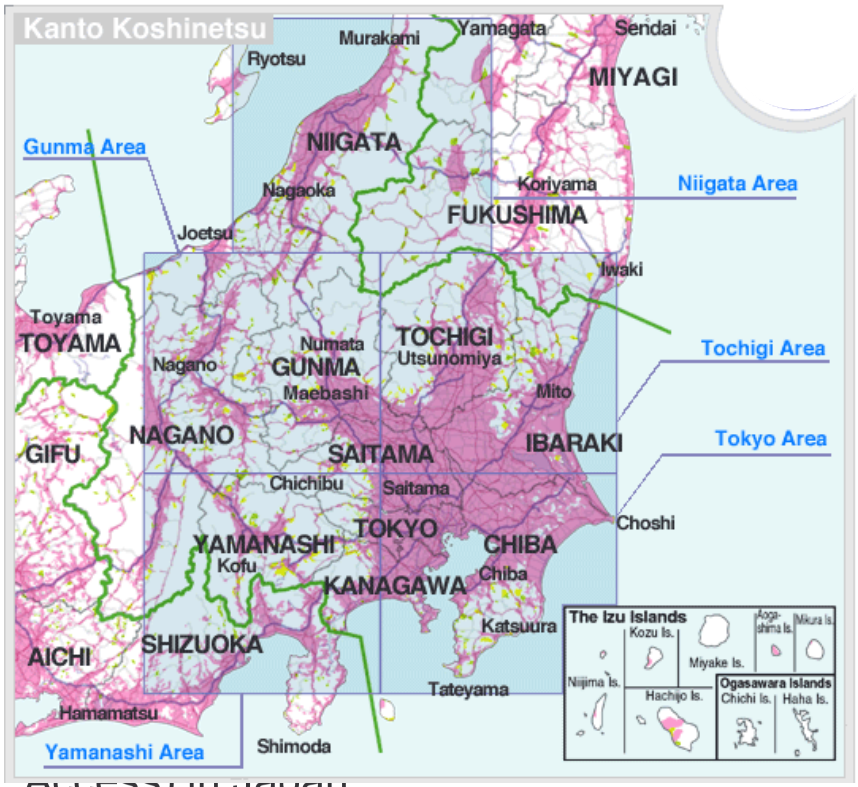

Access) in Japan

Examples for FOMA phones

Example 3G networks: Australia

cdma2000 1xEV-DO in Melbourne/Australia

Examples for 1xEV-DO devices

Isle of Man – Start of UMTS in Europe as Test

UMTS in Monaco

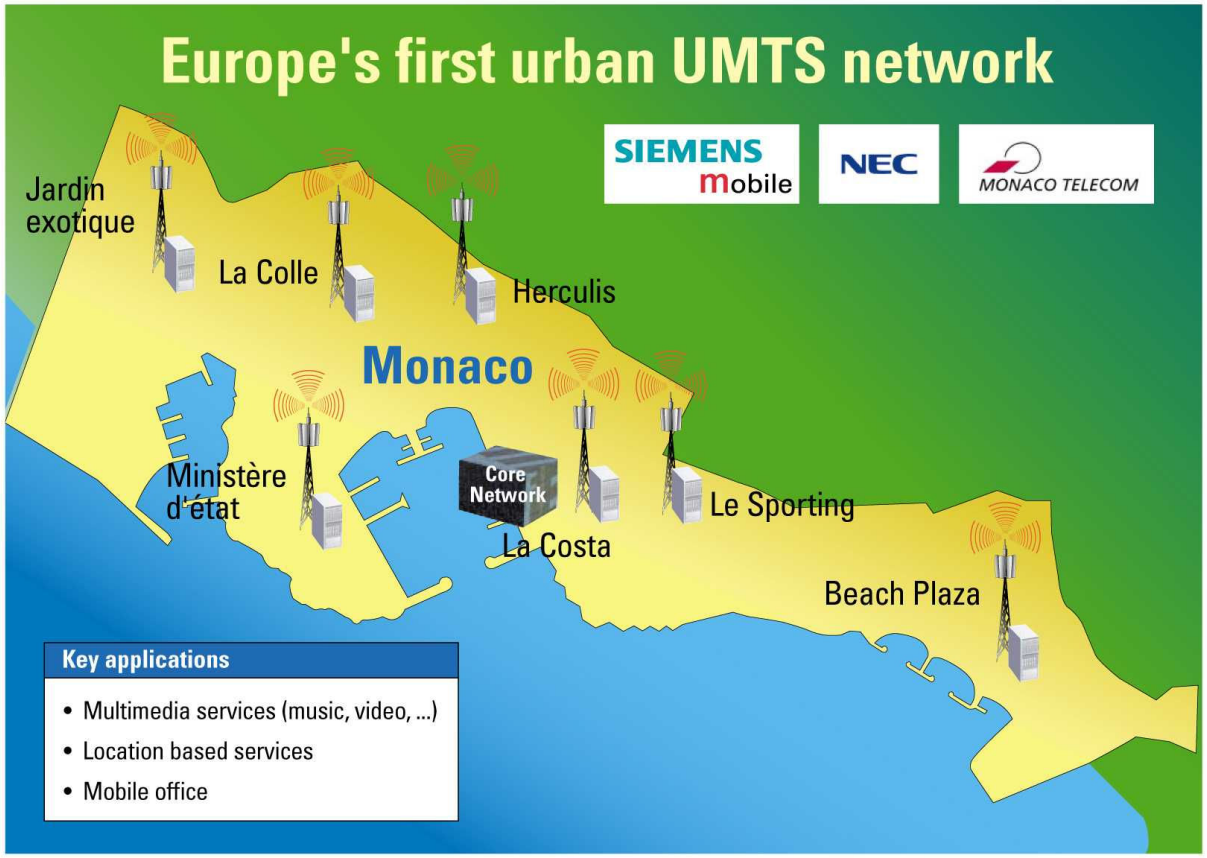

UMTS in Europe

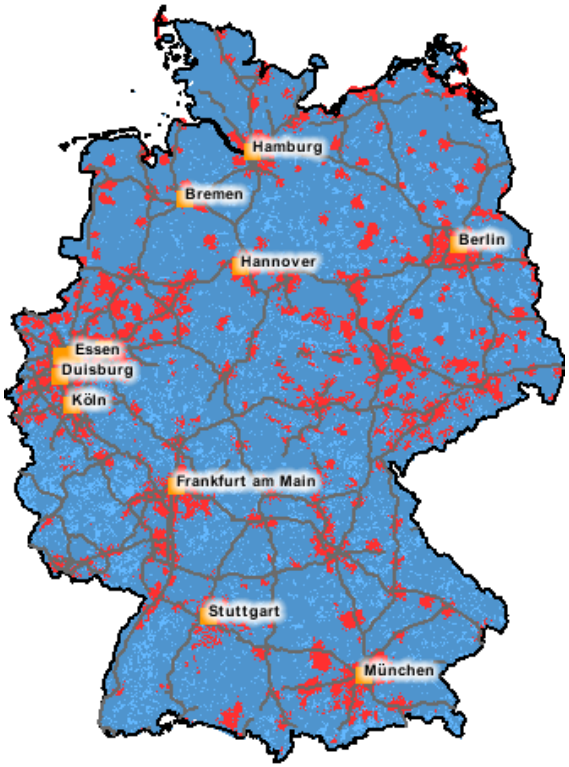

Vodafone/Germany

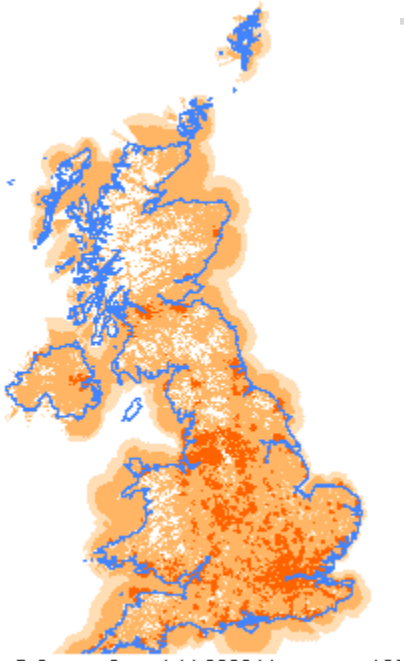

Orange/UK

Some current enhancements

- GSM
  - EMS/MMS
    - EMS: 760 characters possible by chaining SMS, animated icons, ring tones, was soon replaced by MMS (or simply skipped)
    - MMS: transmission of images, video clips, audio
      - see WAP 2.0 / chapter 10
  - EDGE (Enhanced Data Rates for Global [was: GSM] Evolution)
    - 8-PSK instead of GMSK, up to 384 kbit/s
    - new modulation and coding schemes for GPRS ➔ EGPRS
      - MCS-1 to MCS-4 uses GMSK at rates 8.8/11.2/14.8/17.6 kbit/s
      - MCS-5 to MCS-9 uses 8-PSK at rates 22.4/29.6/44.8/54.4/59.2 kbit/s
- UMTS
  - HSDPA (High-Speed Downlink Packet Access)
    - initially up to 10 Mbit/s for the downlink, later on 20 Mbit/s using MIMO- (Multiple Input Multiple Output-) antennas
    - uses 16-QAM instead of QPSK