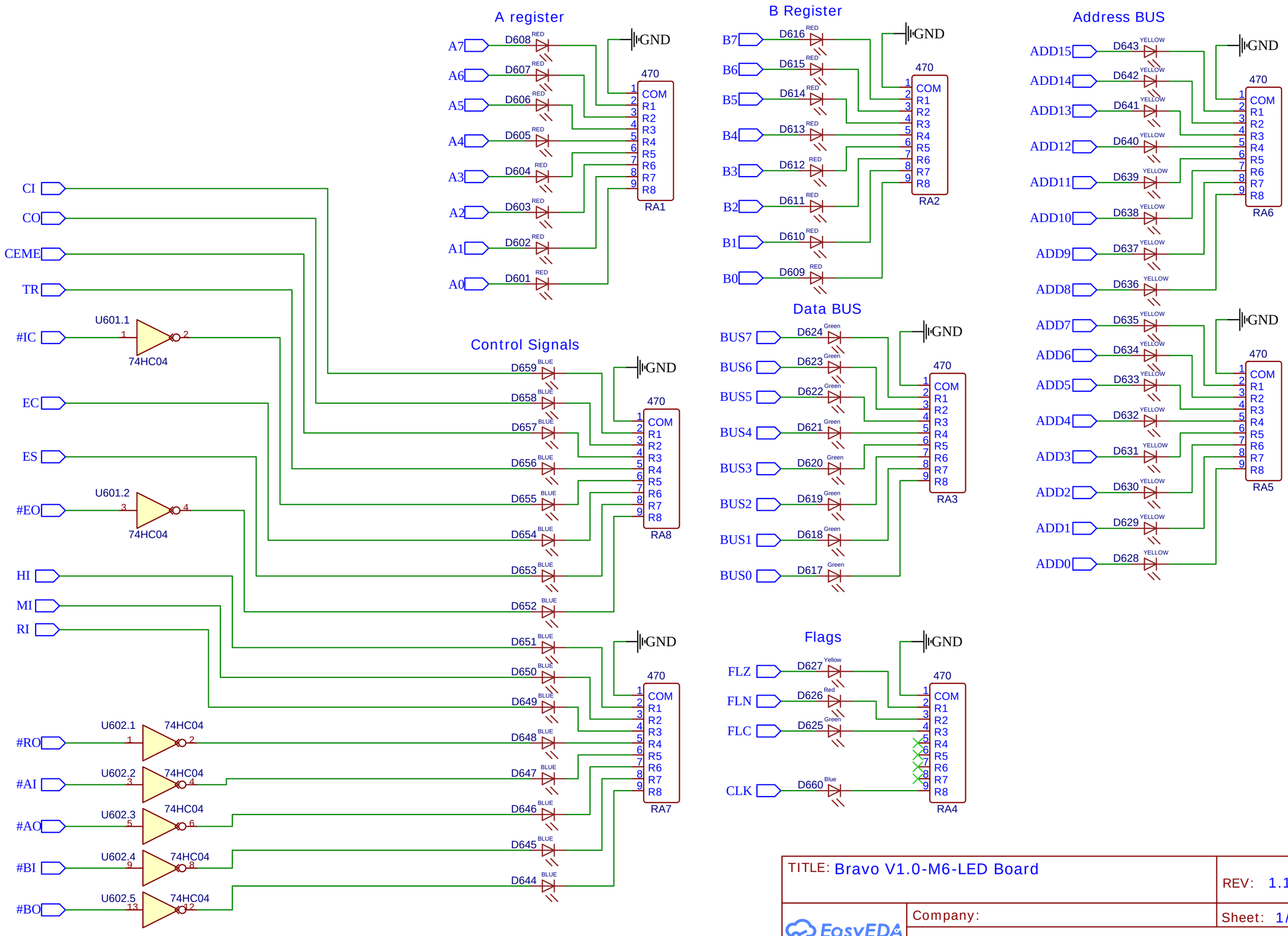

TITLE: Bravo V1.0-M6-LED Board

REV: 1.1

Company:

Sheet: 1/2

Date: 2021-11-23

Drawn By: Kaveh Majidi (CONFIG IOI)

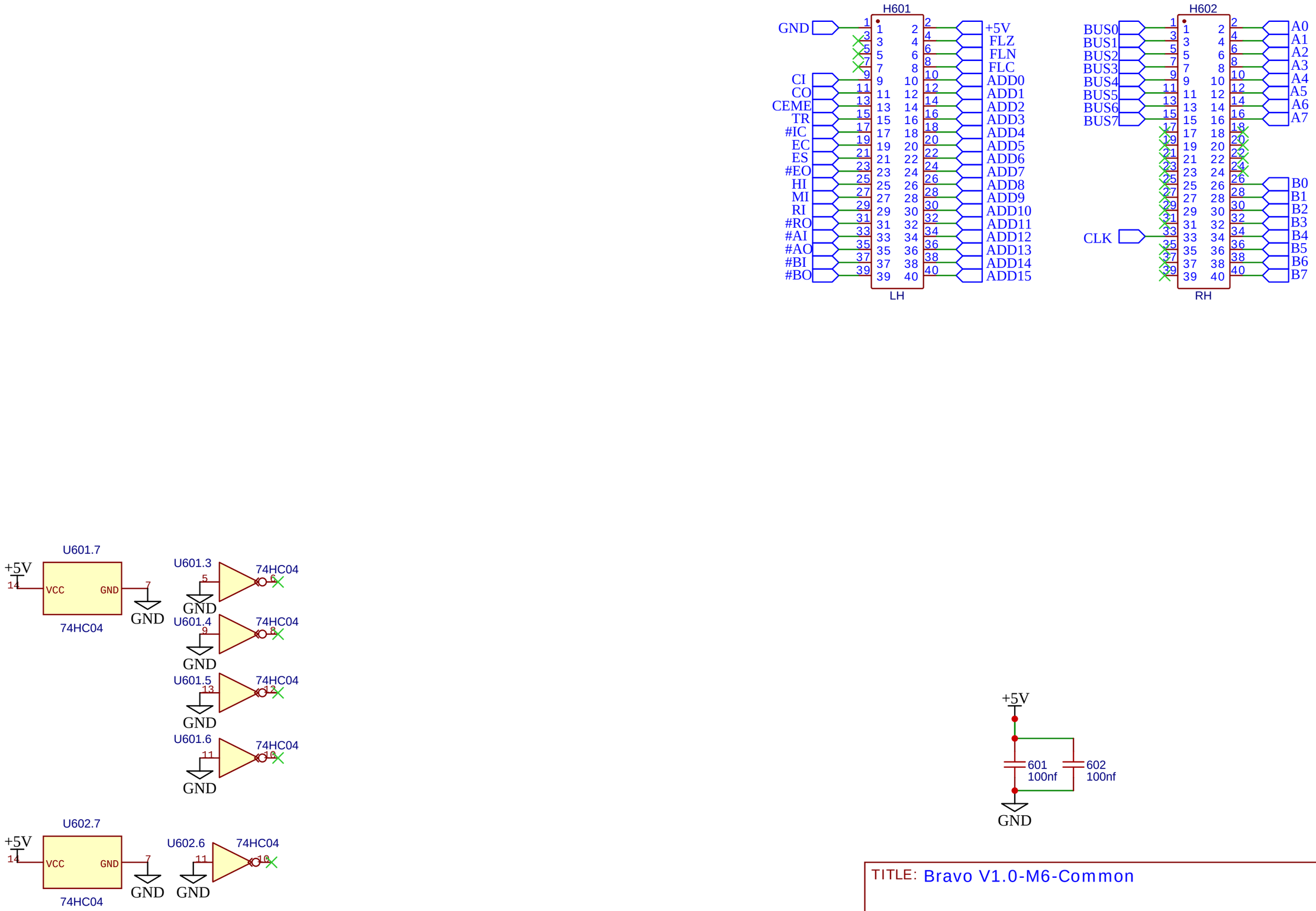

TITLE: Bravo V1.0-M6-Common	REV: 1.1
Company:	Sheet: 2/2
Date: 2021-11-23	Drawn By: Kaveh Majidi (CONFIG IOI)