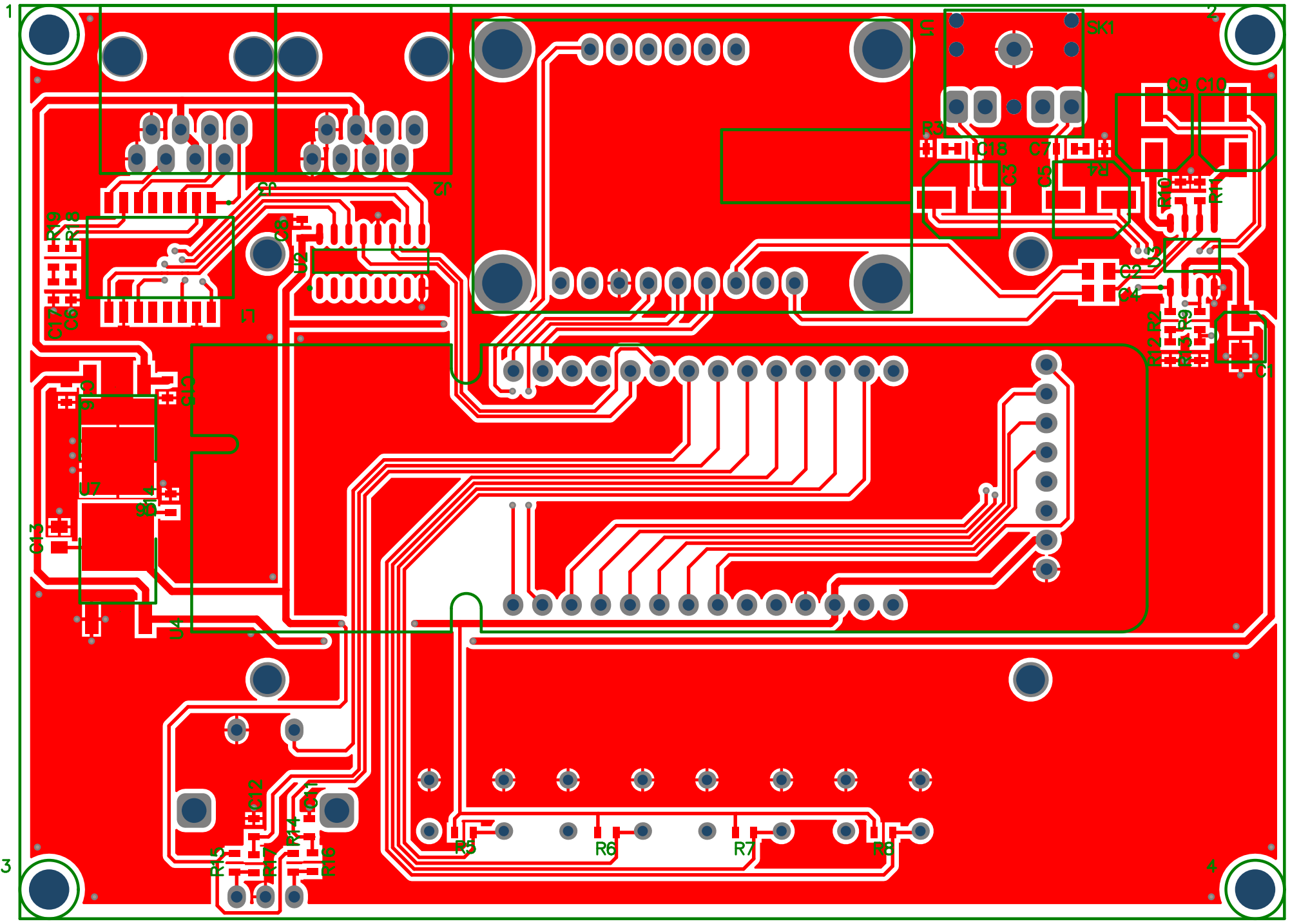
1
2
3
4
SK1
J1
J2
J3
J4
J5
U2
U7
C1
C2
C3
C4
C5
C6
C7
C8
C9
C10
C11
C12
C13
C14
C17
C18
R1
R2
R3
R4
R5
R6
R7
R8
R9
R10
R11
R12
R13
R14
R15
R16
R17
R18
R19

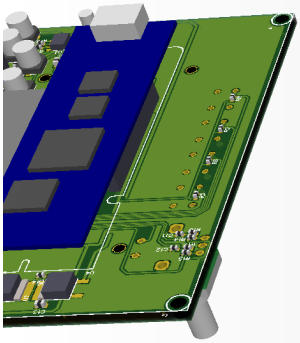

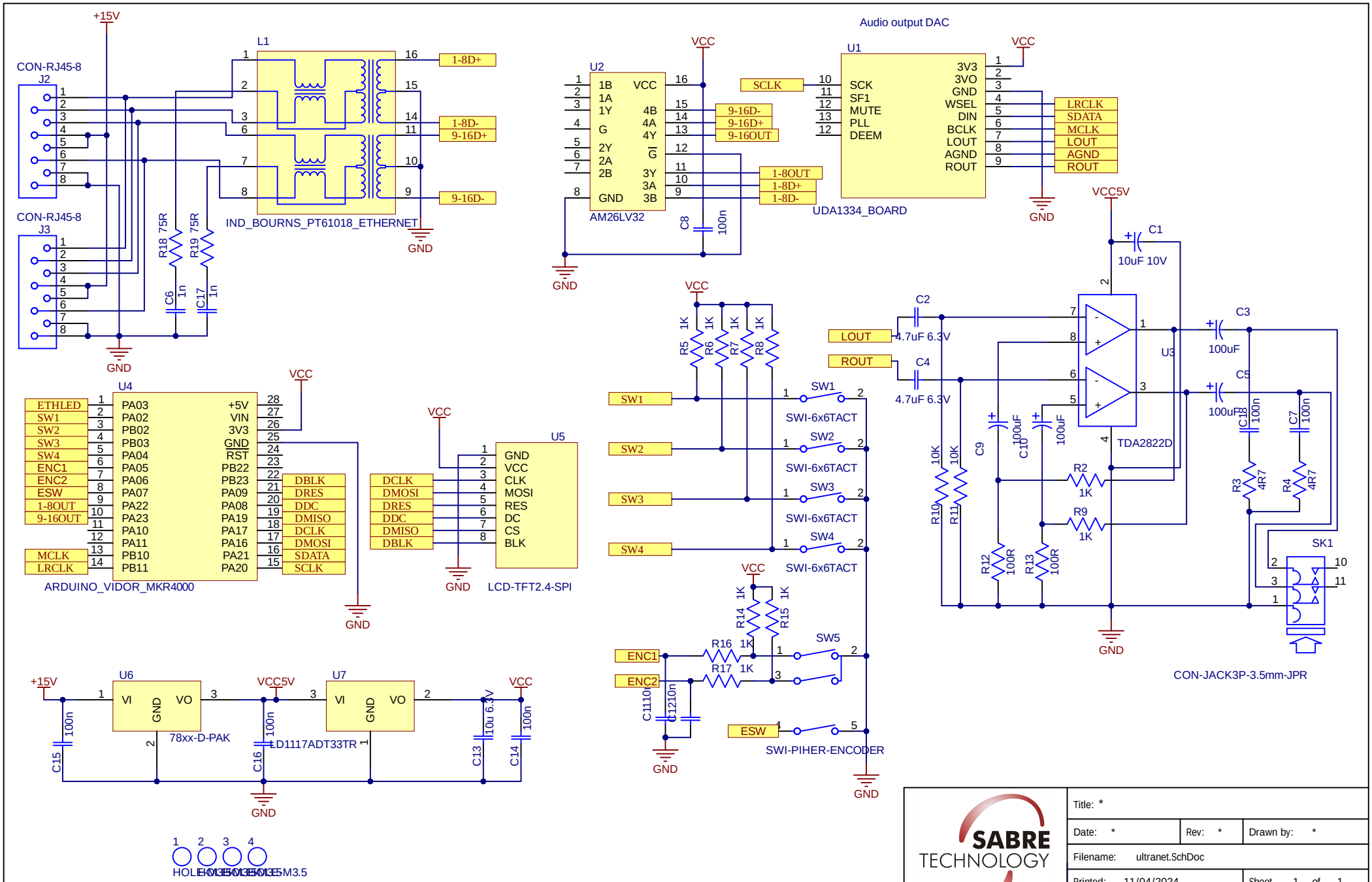

SABRE TECHNOLOGY

Title: *		
Date: *	Rev: *	Drawn by: *
Filename: ultranet.SchDoc		
Printed: 11/04/2024	Sheet 1 of 1	

3a Newlands Science Park, Inglemire Lane, Hull HU6 7TQ
Tel: 01482 801003 Fax: 01482 801078