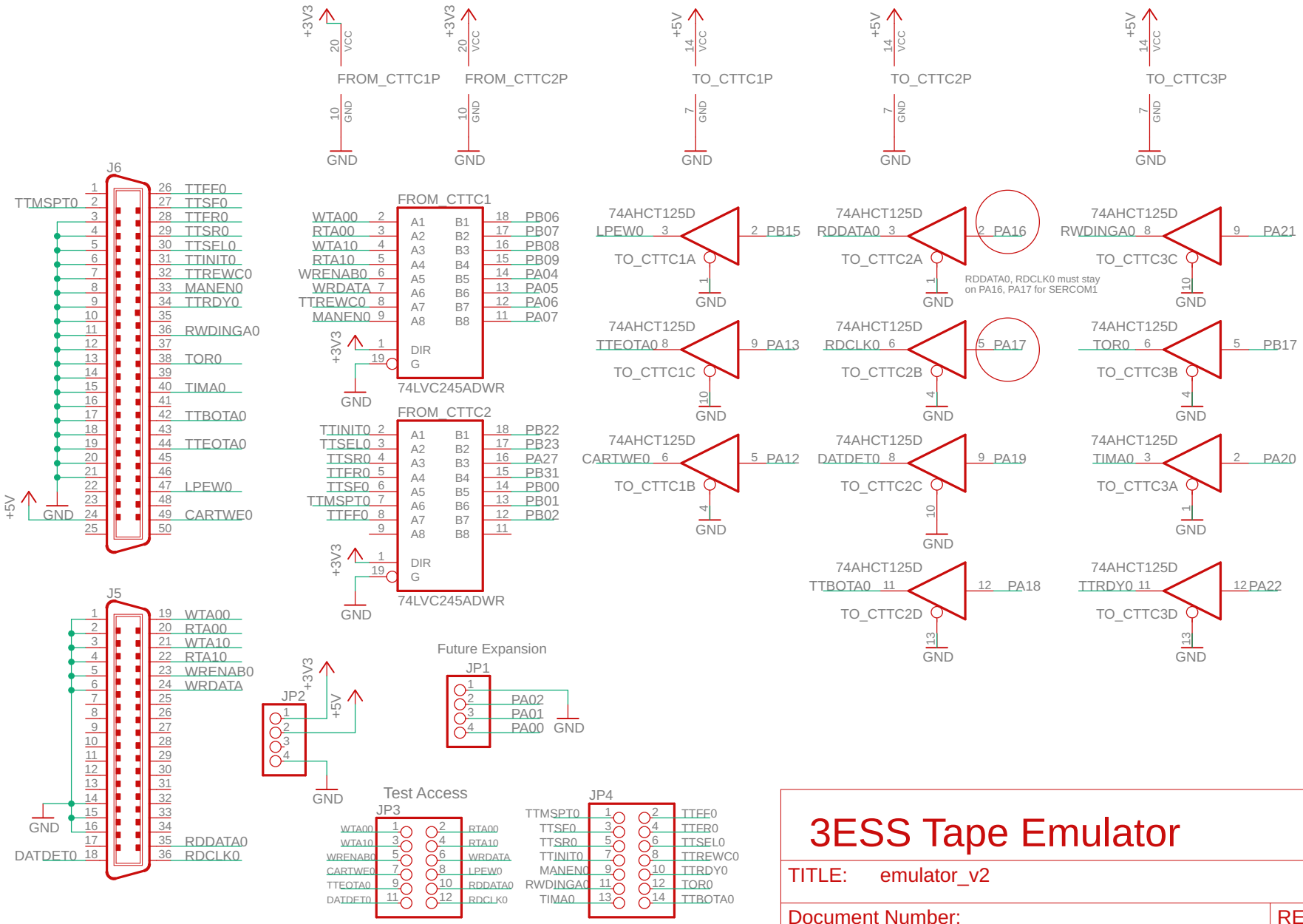

3ESS Tape Emulator

TITLE: emulator_v2

Document Number:

REV: v1

Date: 6/26/20 10:38 PM

Sheet: 1/2

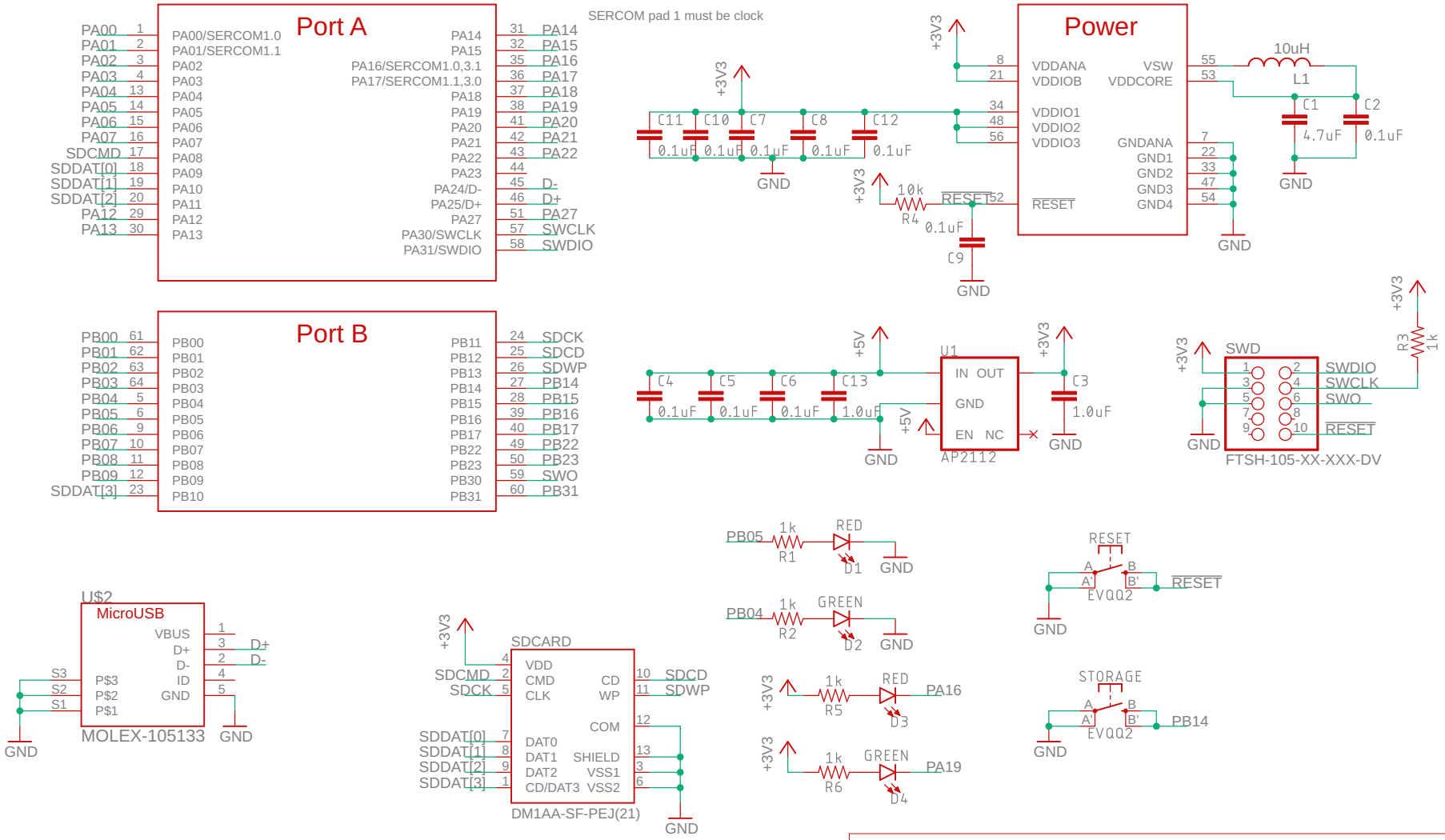

TITLE: emulator_v2

Document Number:

REV:

Date: 6/26/20 10:38 PM

Sheet: 2/2