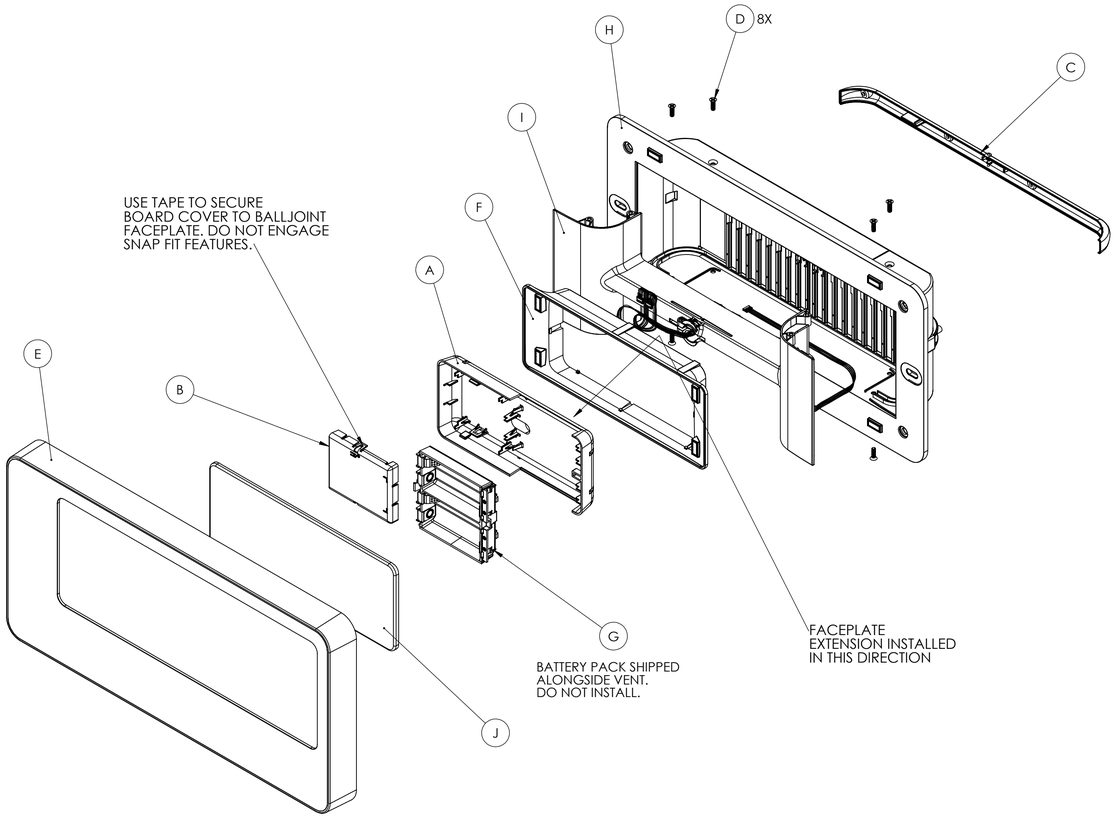

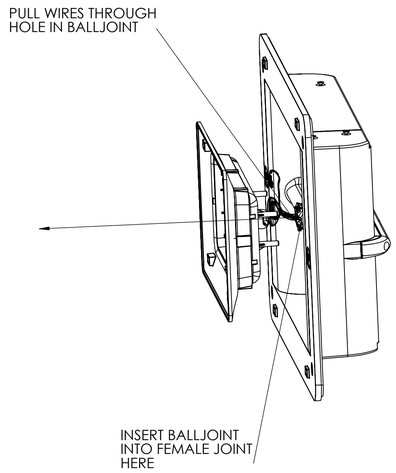

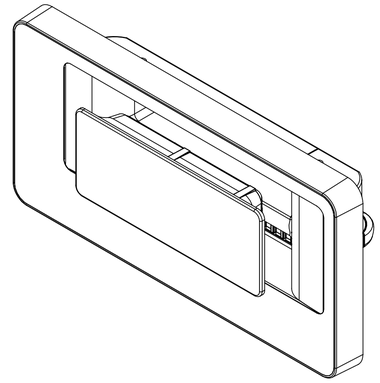

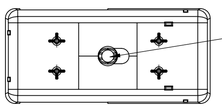

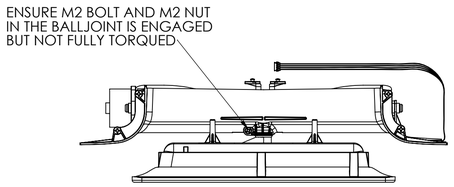

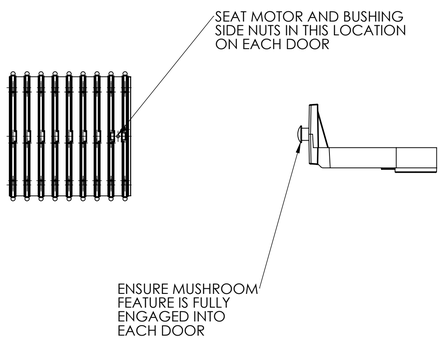

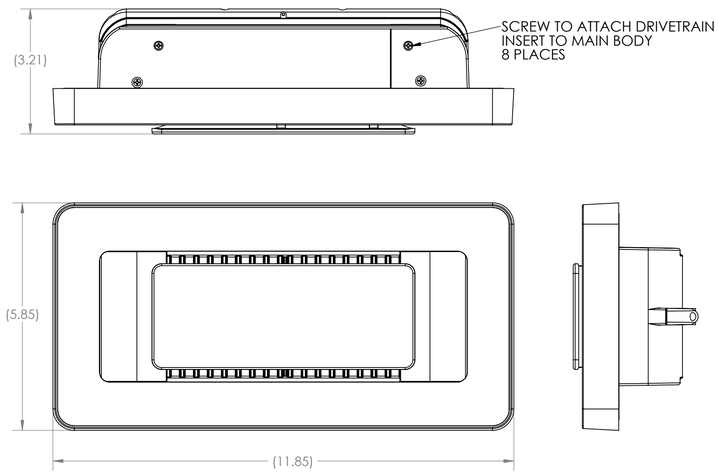

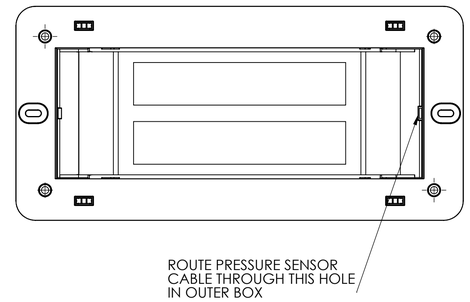

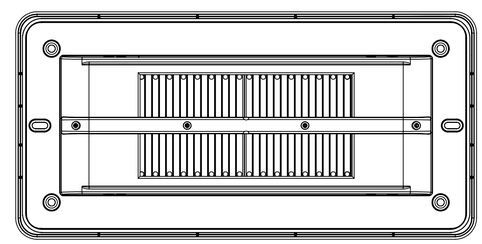

GENERAL NOTES

1. SEE ARENA PLM FOR PART NUMBER REFERENCE DESIGNATORS AND CURRENT REVISIONS.
2. [◆] CALLOUTS ARE APPLIED TO TOLERANCES THAT MAY REQUIRE SPECIAL QUALITY CONTROL PROCESSES. QUALITY CONTROL INSTRUCTIONS ARE OUTSIDE THE SCOPE OF THIS DRAWING AND ARE DEFINED BY EXTERNAL DOCUMENTATION TO BE AGREED TO WITH THE MANUFACTURER.
3. ALL DIMENSIONS AND TOLERANCES MUST BE HELD REGARDLESS OF THE USE OF QUALITY CONTROL SYMBOLS [◆].
4. (X.XX) DIMENSIONS ARE USED AS REFERENCE ONLY AND ARE NOT SUBJECT TO TOLERANCES.
5. UNLESS OTHERWISE SPECIFIED, ALL DIMENSIONS AND TOLERANCES ARE APPLICABLE AT 20 DEGREES CELCIUS (68 DEGREES FAHRENHEIT) IN ACCORDANCE WITH ANSI/ASME B89.6.2
6. ALL HOMOGENOUS MATERIALS AND PROCESSES IN THIS DRAWING SHALL BE COMPLIANT TO THE EU RoHS DIRECTIVE 2011/65/EC
7. REFER TO DETAILED WORK INSTRUCTIONS FOR ASSEMBLY SPECIFICATIONS SUCH AS SCREW TORQUE AND GLUE VOLUME.

ASSEMBLY INSTRUCTIONS:

1. INSERT THE DRIVETRAIN INSERT INTO THE MAIN BODY. MAKE SURE TO ROUTE THE PRESSURE SENSOR CABLE THROUGH THE HOLE IN THE OUTER BOX AS SHOWN.
2. ONCE THE DRIVETRAIN IS INSERTED, SNAP THE MOTOR SIDE AND BUSHING SIDE NUTS INTO THE FLEX FOORS. USE A TOOL TO FULLY ENGAGE THE NUT MUSHROOM FEATURE INTO THE DOOR.
3. SECURE THE DRIVETRAIN INSERT TO THE MAIN BODY USING #2-28X1/4" SCREWS IN 8 PLACES. TORQUE SCREWS TO SPEC GIVEN IN THE DETAILED WORK INSTRUCTIONS.
4. INSTALL THE FACEPLATE EXTENSION ONTO THE BALLJOINT FACEPLATE FROM THE BACK, ENSURING THAT ALL SNAPS ENGAGE FULLY.
5. ROUTE THE MOTOR AND PRESSURE SENSOR WIRE HARNESSES THROUGH THE BALLJOINT HOLE.
6. MOUNT THE BALLJOINT FACEPLATE ONTO THE DRIVETRAIN INSERT BY PUSHING THE MALE BALLJOINT INTO THE FEMALE BALLJOINT. ENSURE WIRES ARE NOT DAMAGED. TORQUE THE M2 SCREW TO SPEC GIVEN IN DETAILED WORK INSTRUCTIONS.
7. USE TAPE TO SECURE THE VENT BOARD COVER IN PLACE INSIDE THE BALLJOINT FACEPLATE. DO NOT ENGAGE SNAP FIT FEATURES.
8. USE TAPE TO SECURE THE PRESSURE SENSOR COVER ONTO THE BACK OF THE MAIN BODY AS SHOWN.
9. MAGNETICALLY ATTACH THE FRAME ONTO THE MAIN BODY.
10. MAGNETICALLY ATTACH THE FACEPLATE COVER ONTO THE FACEPLATE EXTENSION.
11. BATTERY PACK SHIPPED ALONGSIDE VENT IN PULP PACKAGING. DO NOT INSTALL.
12. PULP PACKAGING NOT SHOWN. SEE DETAILED WORK INSTRUCTIONS FOR PACKAGING ASSEMBLY INSTRUCTIONS.

DRAWING NO. 201-00016

REV	DESCRIPTION	ECO	DATE	BY
A	INITIAL RELEASE (FROM 900-00005 DRAWING)	000082	02/23/16	TF
B	REMOVE SCREWS (603-00019) FROM PSC	000085	3/16/16	AK

MATERIAL:

FINISH DESCRIPTION

DO NOT SCALE DRAWING. WORK TO DIMENSION

IF PLATING IS SPECIFIED, ALL DIMENSIONS TO BE MET AFTER PLATING UNLESS OTHERWISE SPECIFIED.
1. PERMISSIBLE TOLERANCES
2. ALL RIGHT ANGLES=90°
3. DIMENSIONS GIVEN IN INCHES

DIMENSIONS=±0.015
ANGLES=±0.5°
CHAMFER ANGLES=±5°
CONCENTRICITY=0.010 T.I.R.

NOTICE: CHANGES TO MATERIAL, DESIGN, CONFIGURATION OR PROCESS MAY NOT BE MADE WITHOUT NOTIFICATION TO ECOVENT. ALL MATERIALS AND PROCESSES MUST BE COMPLIANT WITH ENVIRONMENTAL LAWS AND REGULATIONS AS REFERENCED IN XXXXX

DESIGN	CTQ	CLASSIFICATION OF CHARACTERISTICS
★	★★	(CRITICAL)
◆	◆◆	(MAJOR)

REVIEW: DATE:

TITLE: VENT 10X4 WALL A1

PART NO. 900-00005 SHEET 1 OF 1

SCALE:1:1

THIS DOCUMENT IS THE PROPERTY OF ECOVENT. NEITHER THIS DOCUMENT NOR THE INFORMATION CONTAINED HEREIN MAY BE USED, REPRODUCED OR DISCLOSED TO THIRD PARTIES WITHOUT ECOVENT WRITTEN CONSENT.