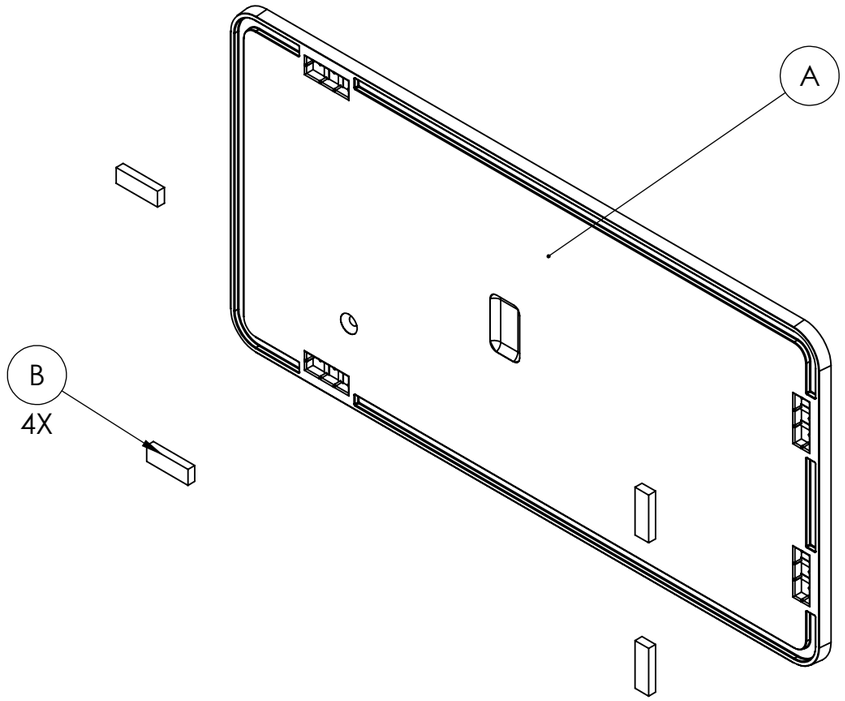

C

USE ADHESIVE TO
ATTACH MAGNETS TO
COVERS,
4 PLACES

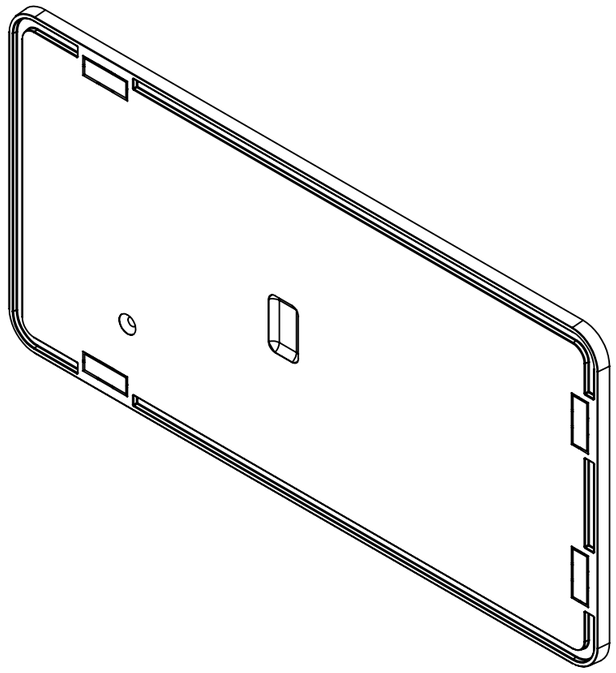

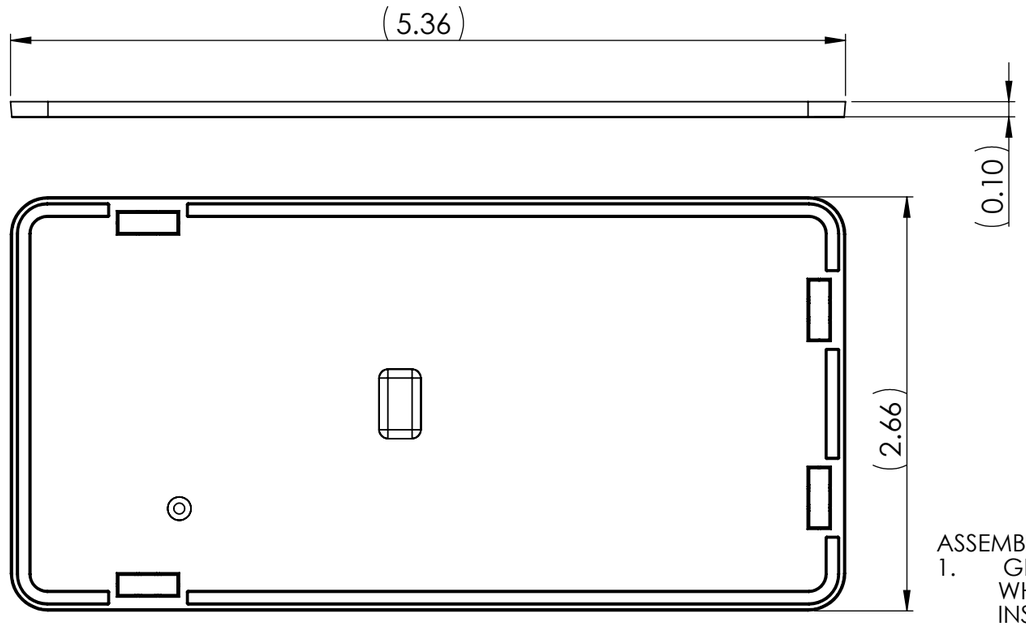

GENERAL NOTES

1. SEE ARENA PLM FOR PART NUMBER REFERENCE DESIGNATORS AND CURRENT REVISIONS.
2. [♦] CALLOUTS ARE APPLIED TO TOLERANCES THAT MAY REQUIRE SPECIAL QUALITY CONTROL PROCESSES. QUALITY CONTROL INSTRUCTIONS ARE OUTSIDE THE SCOPE OF THIS DRAWING AND ARE DEFINED BY EXTERNAL DOCUMENTATION TO BE AGREED TO WITH THE MANUFACTURER.
3. ALL DIMENSIONS AND TOLERANCES MUST BE HELD REGARDLESS OF THE USE OF QUALITY CONTROL SYMBOLS [♦]
4. (X.XX) DIMENSIONS ARE USED AS REFERENCE ONLY AND ARE NOT SUBJECT TO TOLERANCES.
5. UNLESS OTHERWISE SPECIFIED, ALL DIMENSIONS AND TOLERANCES ARE APPLICABLE AT 20 DEGREES CELCIUS (68 DEGREES FAHRENHEIT) IN ACCORDANCE WITH ANSI/ASME B89.6.2
6. ALL HOMOGENOUS MATERIALS AND PROCESSES IN THIS DRAWING SHALL BE COMPLIANT TO THE EU RoHS DIRECTIVE 2011/65/EC
7. REFER TO DETAILED WORK INSTRUCTIONS FOR ASSEMBLY SPECIFICATIONS SUCH AS SCREW TORQUE AND GLUE VOLUME.

ASSEMBLY INSTRUCTIONS:

1. GLUE STEEL RECTANGLES INTO CUTOUTS WHERE SHOWN. REFER TO DETAILED WORK INSTRUCTIONS FOR GLUE PROCESS.

DRAWING NO. 201-00042

REV	DESCRIPTION	ECO	DATE	BY
A	INITIAL RELEASE (FROM DRAWING 801-00012)	000084	3/1/16	CR
B	DRAWING AND PART NUMBER UPDATE	DCO-000043	3/25/16	AK

MATERIAL:

FINISH	DESCRIPTION

DO NOT SCALE DRAWING. WORK TO DIMENSION

IF PLATING IS SPECIFIED, ALL DIMENSIONS TO BE MET AFTER PLATING
UNLESS OTHERWISE SPECIFIED.
1. PERMISSIBLE TOLERANCES — DIMENSIONS=±0.015, ANGLES=±0.5°
2. ALL RIGHT ANGLES=90° — CHAMFER ANGLES=±5°
3. DIMENSIONS GIVEN IN INCHES — CONCENTRICITY=0.010 T.I.R.

NOTICE: CHANGES TO MATERIAL, DESIGN, CONFIGURATION OR PROCESS MAY NOT BE MADE WITHOUT NOTIFICATION TO ECOVENT. ALL MATERIALS AND PROCESSES MUST BE COMPLIANT WITH ENVIRONMENTAL LAWS AND REULATIONS AS REFERENCED IN XXXXX

DESIGN	CTQ	CLASSIFICATION OF CHARACTERISTIS
★	★★	(CRITICAL)
♦	♦♦	(MAJOR)

REVIEW: DATE:

TITLE: FACEPLATE COVER FLOOR A3

PART NO. 801-00012 SHEET 1 OF 1

SCALE:1:1

THIS DOCUMENT IS THE PROPERTY OF ECOVENT. NEITHER THIS DOCUMENT NOR ANY INFORMATION CONTAINED HERIN MAY BE USED, REPRODUCED OR DISCLOSED TO THIRD PARTIES WITHOUT ECOVENT WRITTEN CONSENT.