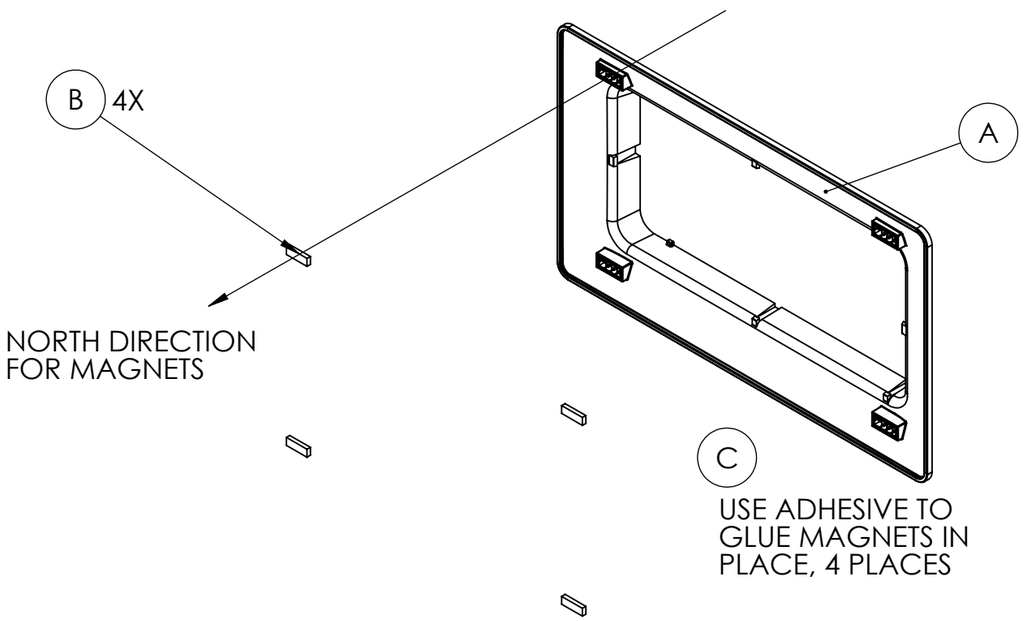

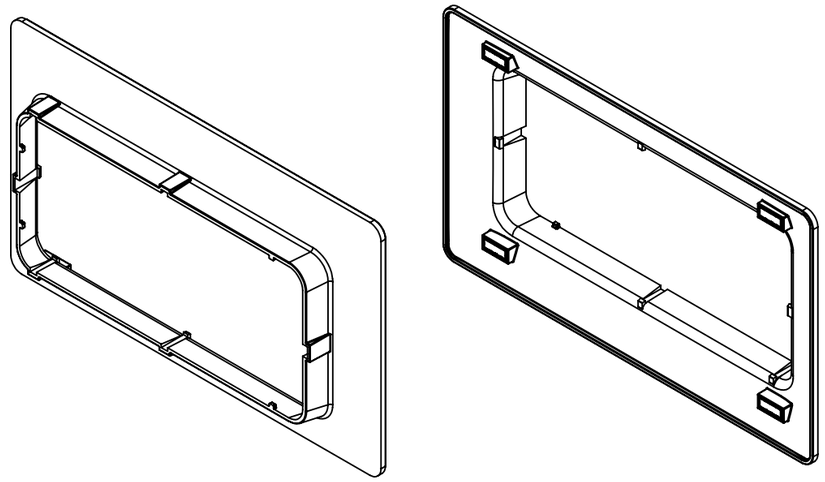

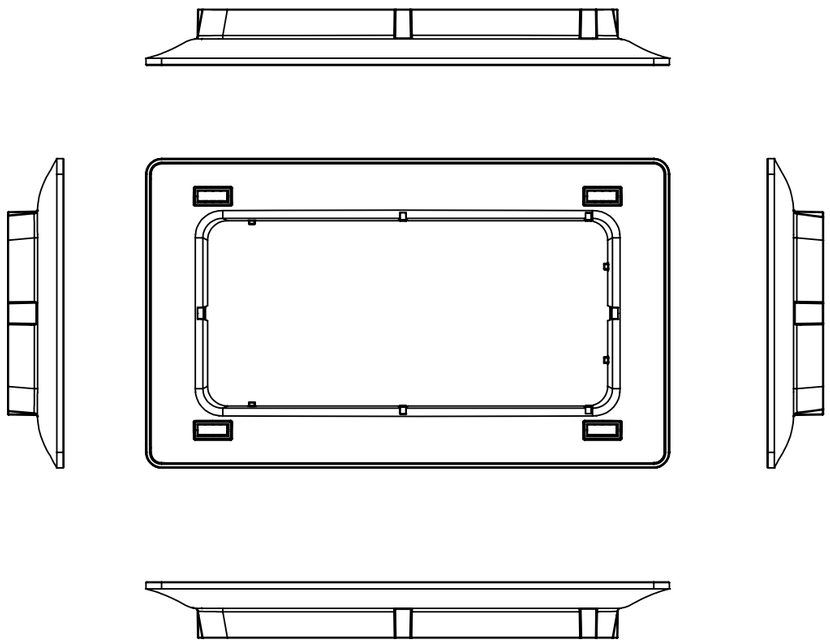

GENERAL NOTES

1. SEE ARENA PLM FOR PART NUMBER REFERENCE DESIGNATORS AND CURRENT REVISIONS.
2. [♦] CALLOUTS ARE APPLIED TO TOLERANCES THAT MAY REQUIRE SPECIAL QUALITY CONTROL PROCESSES. QUALITY CONTROL INSTRUCTIONS ARE OUTSIDE THE SCOPE OF THIS DRAWING AND ARE DEFINED BY EXTERNAL DOCUMENTATION TO BE AGREED TO WITH THE MANUFACTURER.
3. ALL DIMENSIONS AND TOLERANCES MUST BE HELD REGARDLESS OF THE USE OF QUALITY CONTROL SYMBOLS [♦]
4. (X.XX) DIMENSIONS ARE USED AS REFERENCE ONLY AND ARE NOT SUBJECT TO TOLERANCES.
5. UNLESS OTHERWISE SPECIFIED, ALL DIMENSIONS AND TOLERANCES ARE APPLICABLE AT 20 DEGREES CELCIUS (68 DEGREES FAHRENHEIT) IN ACCORDANCE WITH ANSI/ASME B89.6.2
6. ALL HOMOGENOUS MATERIALS AND PROCESSES IN THIS DRAWING SHALL BE COMPLIANT TO THE EU RoHS DIRECTIVE 2011/65/EC
7. REFER TO DETAILED WORK INSTRUCTIONS FOR ASSEMBLY SPECIFICATIONS SUCH AS SCREW TORQUE AND GLUE VOLUME.

ASSEMBLY INSTRUCTIONS:

1. GLUE MAGNETS INTO MAGNET CUTOUTS WHERE SHOWN. USE AMOUNT OF GLUE SPECIFIED IN DETAILED WORK INSTRUCTIONS. ENSURE NORTH IS FACING THE CORRECT DIRECTION, AS NOTED IN THE DRAWING.

THE FOLLOWING PARTS ARE USED BASED ON VENT SIZE AND CONFIGURATION:

SIZE	CONFIGURATION	PART NUMBER
10X4	WALL	801-00015
	CEILING	801-00016
10X6	WALL	801-00009
	CEILING	801-00052
12X4	WALL	801-00013
	CEILING	801-00014
12X6	WALL	801-00064
	CEILING	801-00058

DRAWING NO. 201-00039

REV	DESCRIPTION	ECO	DATE	BY
A	INITIAL RELEASE (FROM 801-00009 DRAWING)	000084	3/1/16	AK
B	DRAWING AND PART NUMBER UPDATE	DCO-000043	3/25/16	AK

MATERIAL:

FINISH	DESCRIPTION

DO NOT SCALE DRAWING. WORK TO DIMENSION

IF PLATING IS SPECIFIED, ALL DIMENSIONS TO BE MET AFTER PLATING
UNLESS OTHERWISE SPECIFIED.
1. PERMISSIBLE TOLERANCES
2. ALL RIGHT ANGLES=90°
3. DIMENSIONS GIVEN IN INCHES

DIMENSIONS= ±0.015
ANGLES= ±0.5°
CHAMFER ANGLES= ±5°
CONCENTRICITY=0.010 T.I.R.

NOTICE: CHANGES TO MATERIAL, DESIGN, CONFIGURATION OR PROCESS MAY NOT BE MADE WITHOUT NOTIFICATION TO ECOVENT. ALL MATERIALS AND PROCESSES MUST BE COMPLIANT WITH ENVIRONMENTAL LAWS AND REULATIONS AS REFERENCED IN XXXXX

DESIGN	CTQ	CLASSIFICATION OF CHARACTERISTIS
★	★★	(CRITICAL)
♦	♦♦	(MAJOR)

REVIEW: DATE:

TITLE: FACEPLATE EXTENSION A3

PART NO. SEE TABLE SHEET 1 OF 1

SCALE:1:2

THIS DOCUMENT IS THE PROPERTY OF ECOVENT. NEITHER THIS DOCUMENT NOR ANY INFORMATION CONTAINED HERIN MAY BE USED, REPRODUCED OR DISCLOSED TO THIRD PARTIES WITHOUT ECOVENT WRITTEN CONSENT.