ENG. APPROVED SOURCE	SOURCE PART NO.

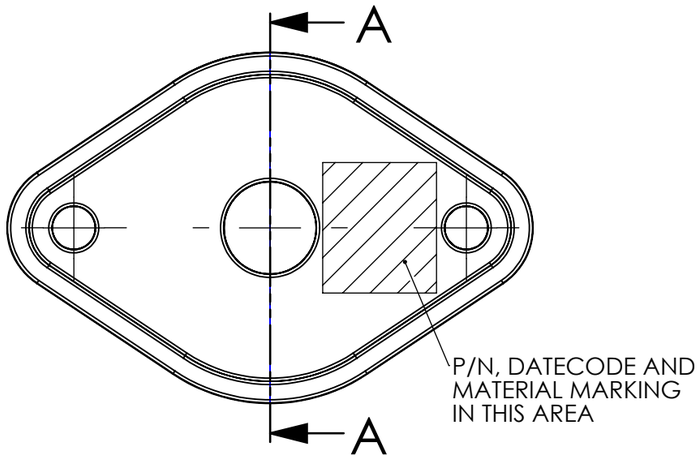

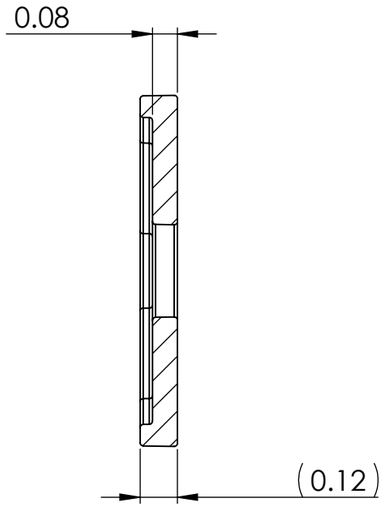

SECTION A-A

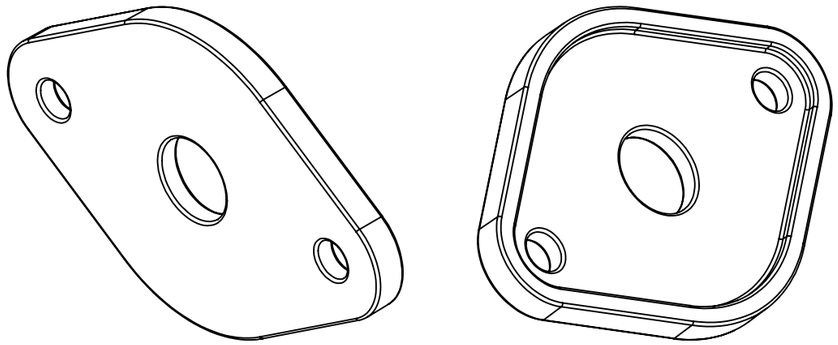

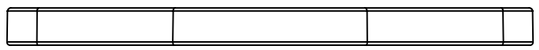

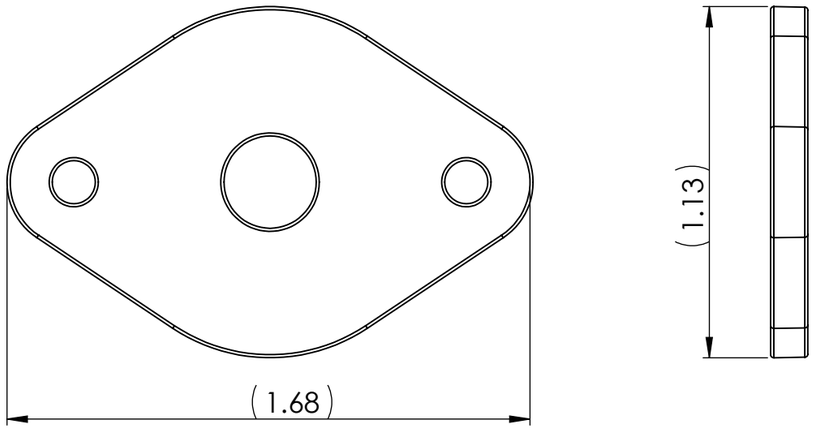

NOTES

1. IF DIMENSION IS NOT SPECIFIED, ASSUME TOLERANCE: ±0.015"
2. 3D FILE DIMENSIONS SUPERSEDE DIMENSIONS IN THIS DOCUMENT.
3. TOLERANCE FOR NOTED DIMENSIONS ARE AS FOLLOWS:
   X.XX = ±0.010"
   X.XXX= ±0.005"
4. TOLERANCE FOR ALL ANGLES: ±0.5 DEGREES
5. TOLERANCE FOR ALL RADII: ±0.005 OR 10%, WHICHEVER IS SMALLER.
6. SURFACE IS CLEAN AND FREE OF BURRS AND ROUGH EDGES.
7. REFER TO SOLID MODEL FOR DRAFT ANGLE ON SURFACES UNLESS OTHERWISE NOTED.
8. REFER TO SOLID MODEL FOR CORNER AND FILLET RADII UNLESS OTHERWISE NOTED.
9. UNLESS OTHERWISE NOTED, ALL SURFACES TO BE MINIMUM OF SPI C3 FINISH. ALL TOOL AND CUTTER MARKS TO BE REMOVED.
10. GATE, PARTING LINE, EJECTOR PIN LOCATIONS, AND OTHER FEATURES FOR TOOLING CONSIDERATIONS SHALL BE APPROVED BY ECOVENT BEFORE TOOL CONSTRUCTION.
11. PARTING LINE FLASH, GATES, RUNNER, AND RISER STUBS 0.005" MAXIMUM.
12. EJECTOR PIN MARKS SHALL BE FLUSH TO .003 UNDERFLUSH WITH SURFACE.
13. VISIBLE SINK MARKS TO BE .0005" DEEP MAX ON ALL COSMETIC SURFACES.
14. [♦] CALLOUTS ARE APPLIED TO TOLERANCES THAT MAY REQUIRE SPECIAL QUALITY CONTROL PROCESSES. QUALITY CONTROL INSTRUCTIONS ARE OUTSIDE THE SCOPE OF THIS DRAWING AND ARE DEFINED BY EXTERNAL DOCUMENTATION TO BE AGREED TO WITH THE MANUFACTURER.
15. NO REGRIND ACCEPTABLE.
16. INTERIOR OF PART TO SHOW PART NUMBER, TOOL AND CAVITY NUMBER, TOOL REVISION (ON EJECTOR PIN), AND MATERIAL SYMBOL.
17. UNLESS OTHERWISE SPECIFIED, ALL DIMENSIONS AND TOLERANCES ARE APPLICABLE AT 20 DEGREES CELCIUS (68 DEGREES FAHRENHEIT) IN ACCORDANCE WITH ANSI/ASME B89.6.2.
18. ALL HOMOGENOUS MATERIALS AND PROCESSES IN THIS DRAWING SHALL BE COMPLIANT TO THE EU RoHS DIRECTIVE 2011/65/EC.

REV	DESCRIPTION	ECO	DATE	BY
A	INITIAL TOOLING RELEASE			

MATERIAL:
Versaflex™ VDT 4132 - Polyone GLS OR ECOVENT APPROVED EQUIVALENT

FINISH	DESCRIPTION

DO NOT SCALE DRAWING. WORK TO DIMENSION

IF PLATING IS SPECIFIED, ALL DIMENSIONS TO BE MET AFTER PLATING
UNLESS OTHERWISE SPECIFIED.
1. PERMISSIBLE TOLERANCES
2. ALL RIGHT ANGLES=90°
3. DIMENSIONS GIVEN IN INCHES

DIMENSIONS=±0.015
ANGLES=±1°
CHAMFER ANGLES=±5°
CONCENTRICITY=0.010 T.I.R.

NOTICE: CHANGES TO MATERIAL, DESIGN, CONFIGURATION OR PROCESS MAY NOT BE MADE WITHOUT NOTIFICATION TO ECOVENT. ALL MATERIALS AND PROCESSES MUST BE COMPLIANT WITH ENVIRONMENTAL LAWS AND REULATIONS AS REFERENCED IN XXXXX

DESIGN	CTQ	CLASSIFICATION OF CHARACTERISTIS
★	★★	(CRITICAL)
♦	♦♦	(MAJOR)

REVIEW: DATE:

TITLE: MOTOR COVER FRONT A3

PART NO. 602-00086 SHEET 1 OF 1

SCALE:2:1

THIS DOCUMENT IS THE PROPERTY OF ECOVENT. NEITHER THIS DOCUMENT NOR ANY INFORMATION CONTAINED HERIN MAY BE USED, REPRODUCED OR DISCLOSED TO THIRD PARTIES WITHOUT ECOVENT WRITTEN CONSENT.