HEIRARCHICAL NET

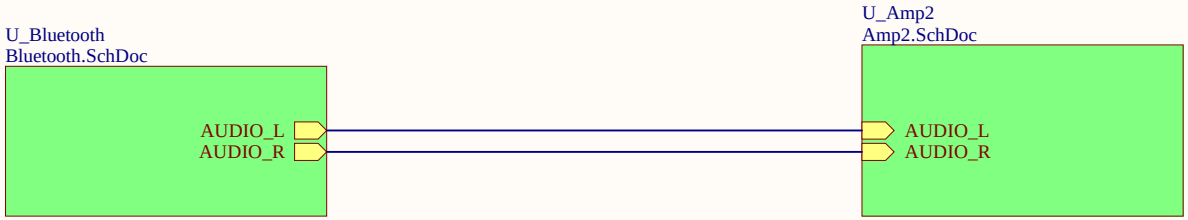

Title	Global Audio Net	
Size A	Number	Revision 1
Date: 4/29/2026		Sheet of
File: C:\Users\..\Top_Sheet.SchDoc		Drawn By: Connor Carlisle

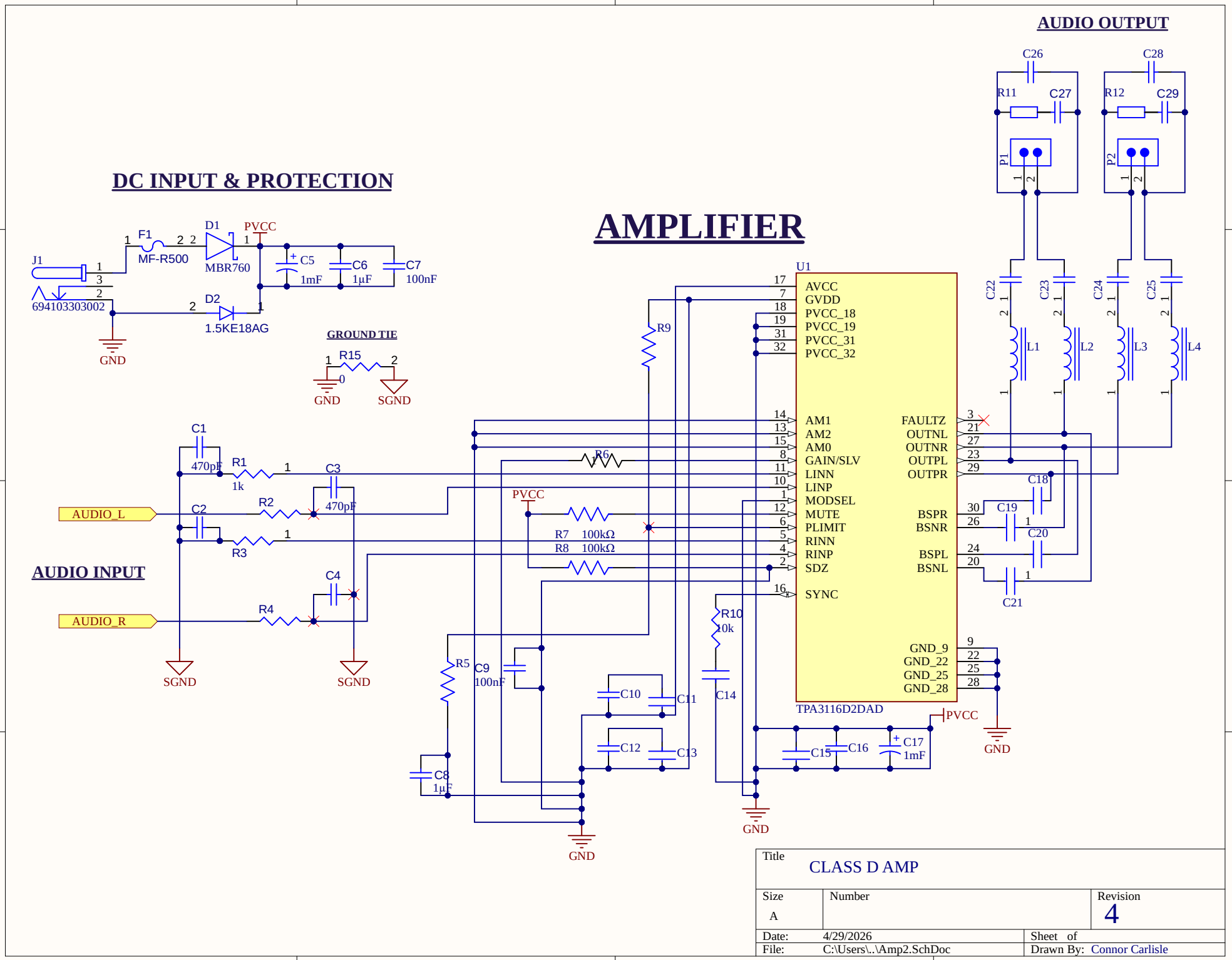

Title	CLASS D AMP	
Size A	Number	Revision 4
Date: 4/29/2026		Sheet of
File: C:\Users\..\Amp2.SchDoc		Drawn By: Connor Carlisle

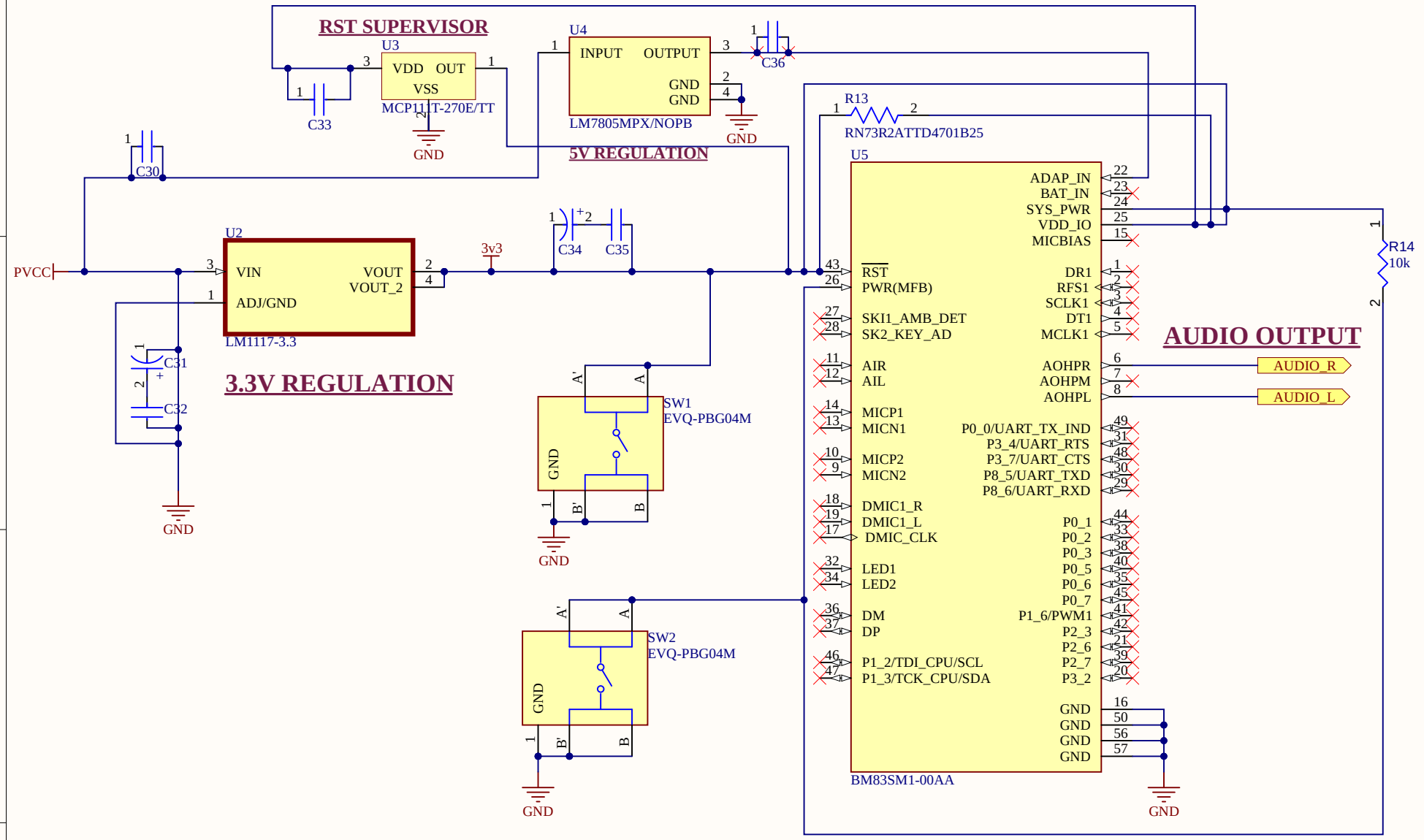

Title	CLASS D AMP: BLUETOOTH MODULE	
Size A	Number	Revision 4
Date: 4/29/2026		Sheet of
File: C:\Users\..\Bluetooth.SchDoc		Drawn By: Connor Carlisle

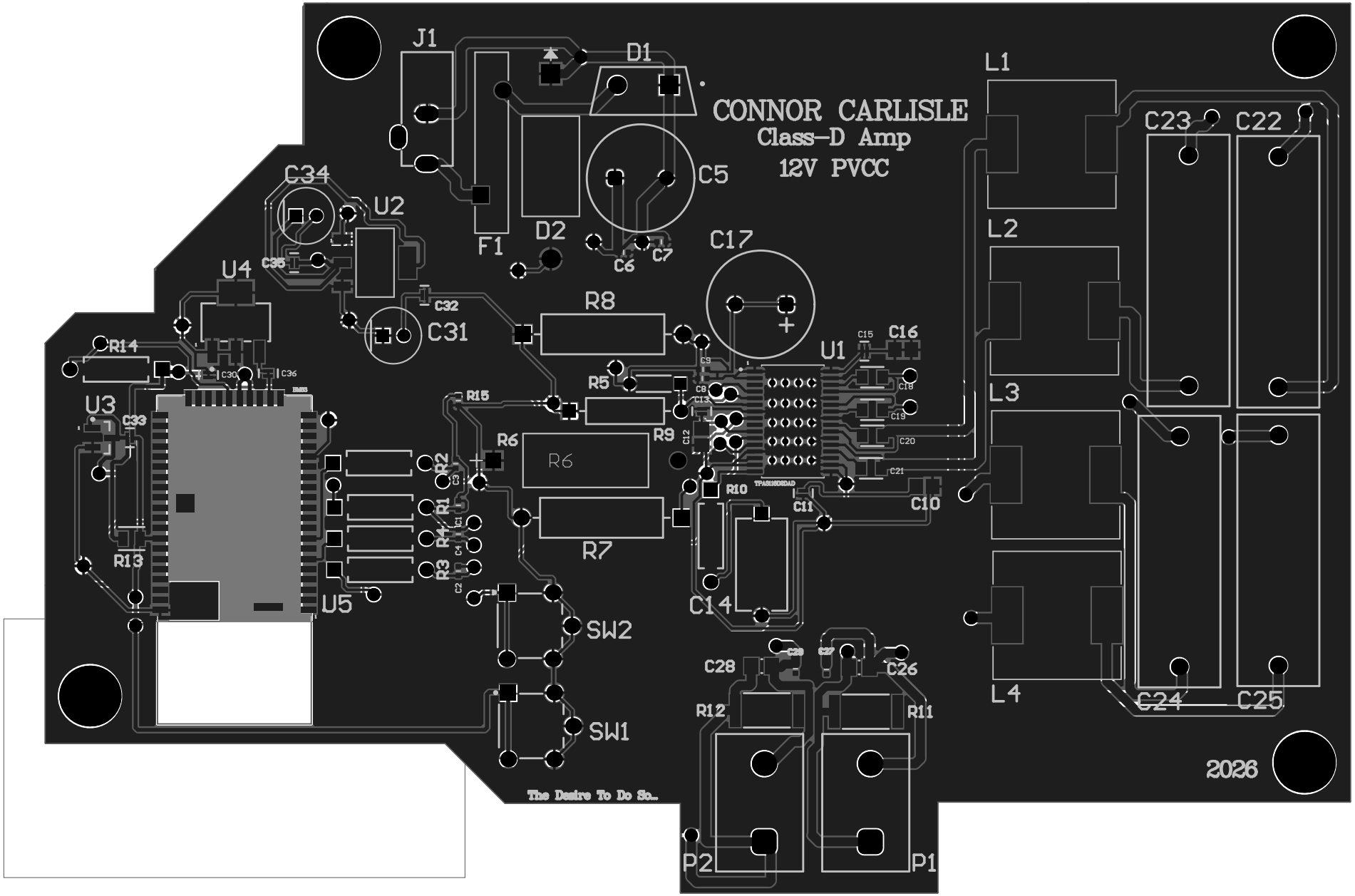
CONNOR CARLISLE
Class-D Amp
12V PVCC
J1
D1
C5
C34
U2
F1
D2
C6
C7
C17
U4
C35
C32
C31
R8
R14
C30
C36
U3
C33
R15
R5
R9
R6
R7
R2
R1
R4
R3
R13
U5
U1
C15
C16
C18
C19
C20
C21
C10
C11
R10
C14
SW2
SW1
C28
C29
C27
C26
R12
R11
P2
P1
L1
L2
L3
L4
C23
C22
C24
C25
2026
The Desire To Do So...

Board Stack Report