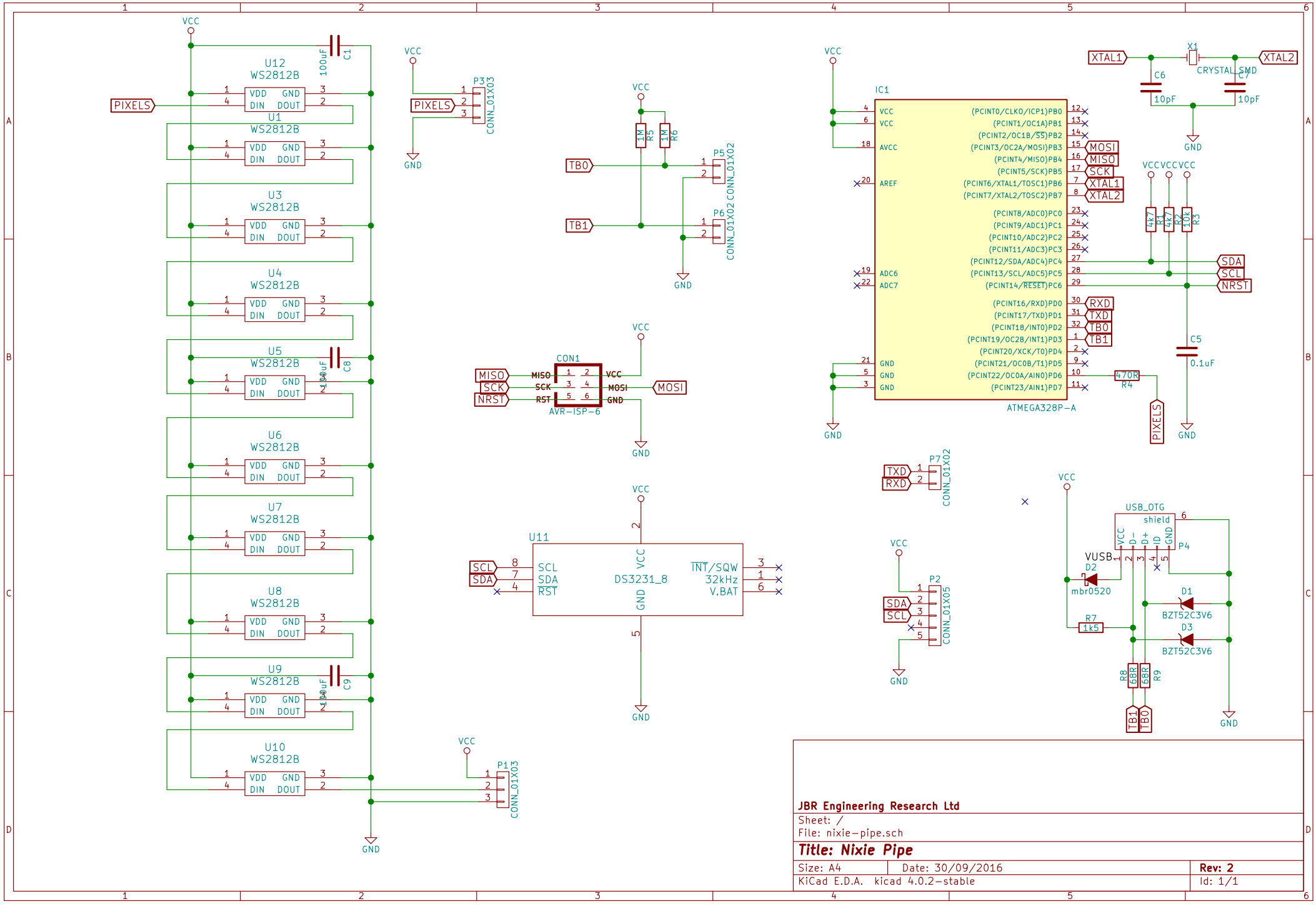

JBR Engineering Research Ltd

Sheet: /

File: nixie-pipe.sch

Title: Nixie Pipe

Size: A4	Date: 30/09/2016	Rev: 2
KiCad E.D.A. kicad 4.0.2-stable		Id: 1/1