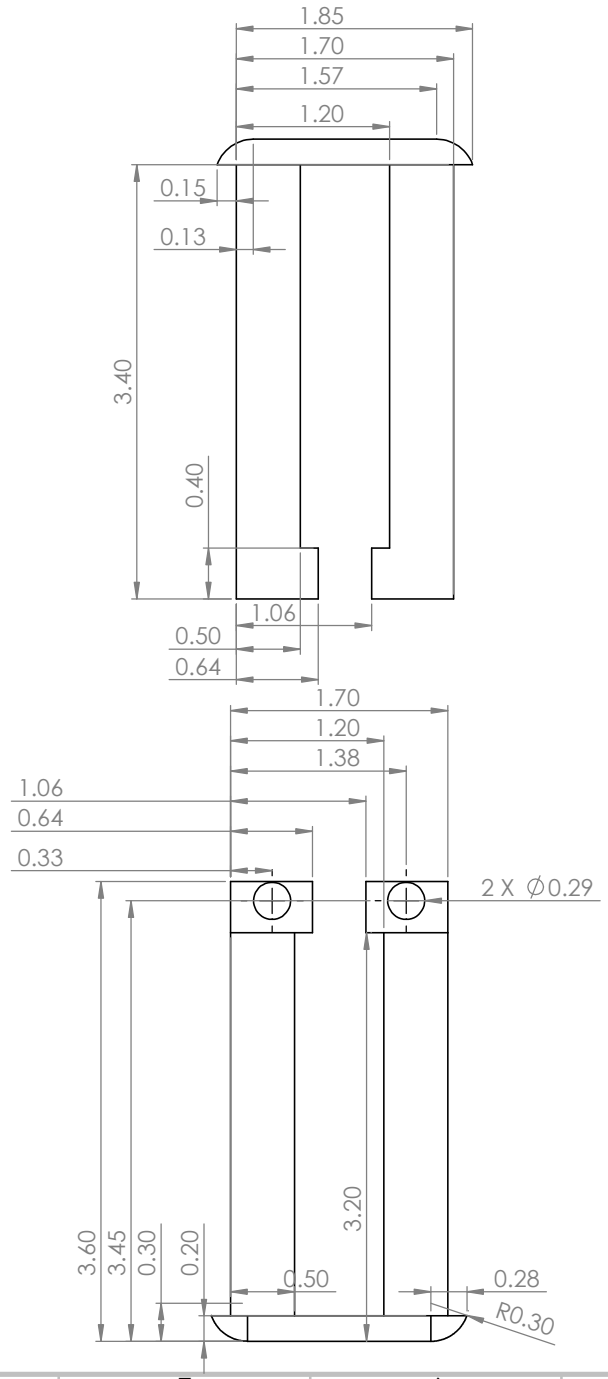

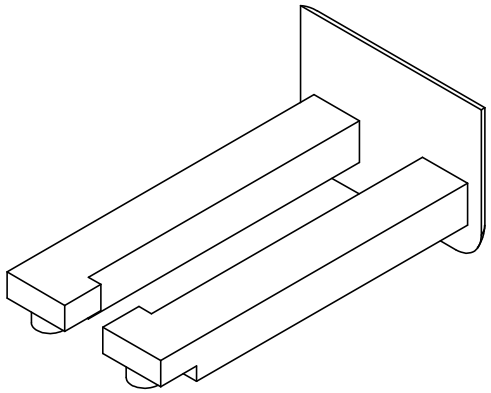

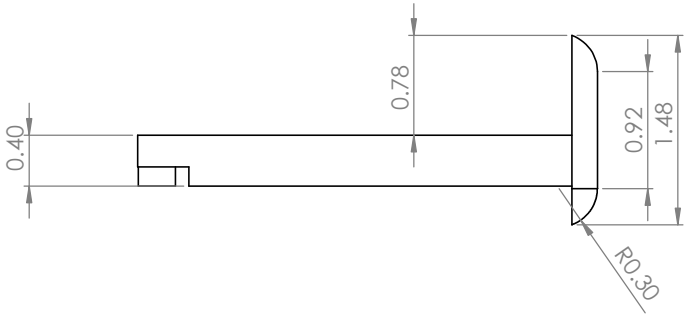

UNLESS OTHERWISE SPECIFIED: DIMENSIONS ARE IN MILLIMETERS SURFACE FINISH: TOLERANCES: LINEAR: ANGULAR:	FINISH:				DEBURR AND BREAK SHARP EDGES	DO NOT SCALE DRAWING / REVISION
	NAME	SIGNATURE	DATE			TITLE: Capstone - Slider
DRAWN	Connor Sweet	Connor Sweet	2023	01	24	
CHK'D						
APPV'D						
MFG						
Q.A				MATERIAL: PLA		DWG NO. slider / A3
				WEIGHT:		SCALE:1:1 / SHEET 1 OF 1

SOLIDWORKS Educational Product. For Instructional Use Only.