XP200 series
Ac servo driver instruction manual
(V1.0 full version)

➢ Product introduction

XP200 series AC servo drive is a domestic leading level of general AC servo drive products. This series of products adopts advanced digital control and AC motor vector control theory, the system has excellent performance and high reliability, and is widely used in food processing, packaging machinery, textile machinery and other related automation industry machinery servo shaft drive.

● Product characteristics

- ➢ Using high performance control chip, excellent control performance
- ➢ Compact design saves installation space
- ➢ Selected new industrial IPM module, overload driving ability is strong
- ➢ Speed control, position control and torque control
- ➢ It can drive various types of permanent magnet synchronous servo motors
- ➢ It has perfect fault protection and status monitoring function
- ➢ It has excellent low speed torque characteristics and dynamic acceleration and deceleration performance

● Type specification

XP200	-	20	P	L	R
①		②	③	④	⑤

① Driver series：

XP200- Servo Drive series

② Module capacity：

20-20A

30-30A

③ Communication mode：

P: 485 communication
C: CAN bus
E: EtherCAT bus

④ Voltage level：

L:220V

H:380V

⑤ Encoder communication mode

None: 2500 lines of parallel communication

R: Serial communication 17/23bit

Safety precautions

Before the product is stored, installed, wired, operated, inspected or repaired, the user must be familiar with and comply with the following important matters to ensure the safe and correct use of the product.

⚠ Danger	Improper operation may cause danger and personal injury
⚠ Notice	Improper operations may cause danger, personal injury, and possibly damage the device.
⊘ Prohibit	Strictly prohibited, otherwise the device will be damaged or unusable.

1. Usage occasion

⚠ Danger
Do not expose the product to water gas, corrosive gas, flammable gas. Failure to do so could result in electric shock or fire. Do not use the product in direct sunlight, dust, salt and metal powder places. It is prohibited to use the product in places where water, oil and medicine drip

2. Wiring

⚠ Notice
Ensure that the grounding terminal is properly grounded. Improper grounding may cause electric shock or fire. Do not connect the 220V driver power supply to the 380V power supply. Otherwise, the device may be damaged, electric shock or fire may occur. Do not connect the output terminals of U, V, and W motors to the three-phase power supply; otherwise, casualties or fire may occur. The output terminals of U, V, and W motors and the driver terminals U, V, and W must be connected one by one, otherwise the motor may speed up and cause equipment losses and casualties. Secure the power supply and motor output terminals; otherwise, fire may occur. Cables must be routed according to the cables. Otherwise, a fire may occur.

3. Controls

⚠ Notice
When the mechanical equipment starts to operate, it must be set with the appropriate parameter values. If it is not adjusted to the appropriate setting value, it may cause the mechanical equipment to lose control or malfunction.Before starting operation, please make sure that the emergency switch can be activated at any time to stop.Please first test whether the servo motor runs normally without load, and then connect the load to avoid unnecessary losses.Do not turn on or off the power frequently; otherwise, the driver may overheat.

4. operation

⊘ Prohibit
When the motor is running, do not touch any rotating parts, otherwise it will cause casualties.When the device is running, do not touch the drive and motor, otherwise it will cause electric shock or burns.Do not move cables when the device is running. Otherwise, personnel may be injured or the device may be damaged.

5. Maintenance and inspection

Prohibit
Do not touch the driver and its motor inside, otherwise it will cause electric shock. Do not remove the driver panel when the power supply is started. Otherwise, electric shock may occur. Do not touch the terminal within 5 minutes of power off, otherwise residual high voltage may cause electric shock. Do not change the wiring when the power is on, otherwise it will cause electric shock. Do not disassemble the servo motor, otherwise it will cause electric shock.

6. Using range

Notice
The products mentioned in this manual are for general industrial use and should not be used on devices that may directly endanger human safety, such as nuclear power devices, aerospace equipment, life support and maintenance equipment, and various safety equipment. If you have the above needs, please contact the customer service of the manufacturer.

Catalogue

Chapter 1 Product inspection and installation.....1
1.1 Product inspectio.....1
1.2 Front Panel.....1
1.3 Servo Driver Installation.....2
1.3.1 Installation Environment Conditions.....2
1.3.2 Installation Methods.....2
1.4 Servo motor mounting.....3
1.4.1 Installation environmental conditions.....3
1.4.2 Installation method.....3
1.5 Definition of motor rotation direction.....3
Chapter 2 Wiring.....4
2.1 System composition and cable connections.....4
2.1.1 Wiring instructions.....4
2.1.2 Wire specification.....4
2.1.3 Description of strong current terminals.....5
2.2CN2 Control signal terminals.....5
2.2.1 Description of CN2 terminal Signals.....5
2.2.2 CN2 Terminal Interface Types.....7
2.3 Schematic diagram of Front panel terminals.....10
2.4 Brake resistance specifications.....10
2.5 Definition diagram of control port CN2 and encoder port CN3.....11
Chapter 3 Panel Operations.....12
3.1 Driver Panel Description.....12
3.1.1 Panel Composition.....12
3.1.2 Panel Description.....12
3.1.3 Value Display.....12
3.2 Main Menu.....12
3.3 Status Monitoring.....13
3.4 Parameter Settings.....17
3.5 Parameter Management.....18
3.6 Auxiliary Functions.....18
3.6.1 Function Overview.....18
3.6.2 Setting Analog to zero.....19
3.6.3 JOG running.....19
3.6.4 Keyboard Speed Adjustment.....19
3.7 Restoring Default Parameters.....20
Chapter 4 Operation.....21
4.1 No-load test run.....21
4.1.1 Cable Connection and Check.....21

4.1.2 Set motor code.....21
4.1.3 Keyboard speed test run（Fn -20）.....22
4.1.4 JOG point test run.....22
4.2 Position control.....23
4.2.1 Position control wiring diagram.....23
4.2.2 Position instruction.....24
4.2.3 Input electronic gear.....25
4.2.4 Position control about gain.....27
4.3 Speed control.....28
4.3.1 Simple example of speed control.....28
4.3.2 Speed instruction related parameters.....29
4.3.3 Speed instruction source.....29
4.3.4 Acceleration and deceleration control.....30
4.3.5 Zero speed clamp.....31
4.3.6 Speed control is about gain.....31
4.4 Torque control.....32
4.4.1 Simple example of torque control.....32
4.4.2 Torque instruction related parameters.....33
4.4.3 Torque instruction source.....34
4.5 Gain adjustment.....34
4.5.1 Gain parameter.....35
4.5.2 Gain adjustment procedure.....36
4.6 Overrange protection.....37
4.7 Working sequence.....38
4.7.1 Power on sequence.....38
4.7.2 Alarm timing when servo is ON.....38
4.7.3 Timing of electromagnetic brake action when the motor is stationary.....39
4.7.4 The electromagnetic brake action timing when the motor is running.....39
4.8 Electromagnetic brake.....40
4.8.1Electromagnetic brake parameter.....40
4.8.2Application of electromagnetic brake.....40
Chapter 5 Parameters.....41
5.1 Parameter Overview.....41
5.1.10 Segment Parameters.....41
5.1.2 1-stage parameter.....42
5.1.3 2-stage parameters (partial).....44
5.2 DI function list.....44
5.3 DO Function List.....44
5.4 Parameter detail.....45
5.4.1 Segment 0 parameter.....45

5.4.2 1-stage parameter 56
5.5 Description of the DI function.....62
5.6 Description of the DO function.....64
Chapter 6 Faults and diagnosis.....65
6.1 Alarm list.....65
6.2 Alarm cause and treatment.....66
Chapter 7 Specifications and fitting motors.....70
7.1 Model specifications and function introduction.....70
7.2 Driver mounting dimensions.....71
7.3 Motor fitting table.....72
Chapter 8 Quick Debugging Guide.....73
8.1 Quick debugging precautions.....
738.2 Position control mode (Quick debugging).....
738.3 Speed control mode (Quick debugging).....
74
8.4 Torque Control mode (Quick debugging).....75
8.5 Debug typical problems and countermeasures.....76
①、An error occurred when restoring default parameters.....76
②、The upper computer is enabled, but the driver is disabled 76
③、The E9/E10/E30/E31/E32/E33 fault alarm is generated.....77
④、Servo motor operation noise or vibration.....77
⑤、The servo motor appears jitter during operation.....77
⑥、The drive has an E2 or E11 alarm.....77
⑦、When the servo motor starts, the drive appears "E5/E12 “ 78
⑧、Servo motor running drive appears ” E 4 ” 78
⑨、The drive runs normally, and the upper computer has "excessive position tracking error".....78
Chapter 9 Description of communication functions.....79
9.1 Function Overview and Wiring Diagram.....79
9.2 Communication parameter.....79
9.3 MODBUS Communication protocol.....80
9.4 Write and read parameters.....83
9.5 Monitor status quantity address description.....83
9.6 Communication instance.....86
9.6.1 Read state quantity（CMD=04H） 86
9.6.2 Read parameter（CMD=03H） 86
9.6.3 Write single parameter（CMD=06H） 87
9.6.4 Write multiple arguments（CMD=10H） 88
9.6.5 Diagnostic function（CMD=08H） 89
9.6.6 Save parameter（CMD=41H） 89
9.6.7 The servo is enabled/disabled（CMD=42H） 90
9.6.8 Alarm clearing（CMD=43H） 90

Chapter 1 Product inspection and installation

1.1 Product inspection

This product has been fully functional tested before leaving the factory. In order to prevent the product from being abnormal due to negligence during shipment, please check the following matters in detail after unpacking:

- Check that the servo drive and servo motor models are the same as those ordered.
- Check the appearance of servo drive and servo motor for damage and scratches. In case of damage in transit，Do not connect cables for power supply
- Check the servo drive and servo motor for loose components. Whether there are loose screws, whether the screws are not locked or come off.
- Check whether the rotor shaft of the servo motor can rotate smoothly by hand. A motor with a brake cannot be rotated directly. If any of the above items are faulty or abnormal, please contact the dealer immediately.

1.2 Product front panel

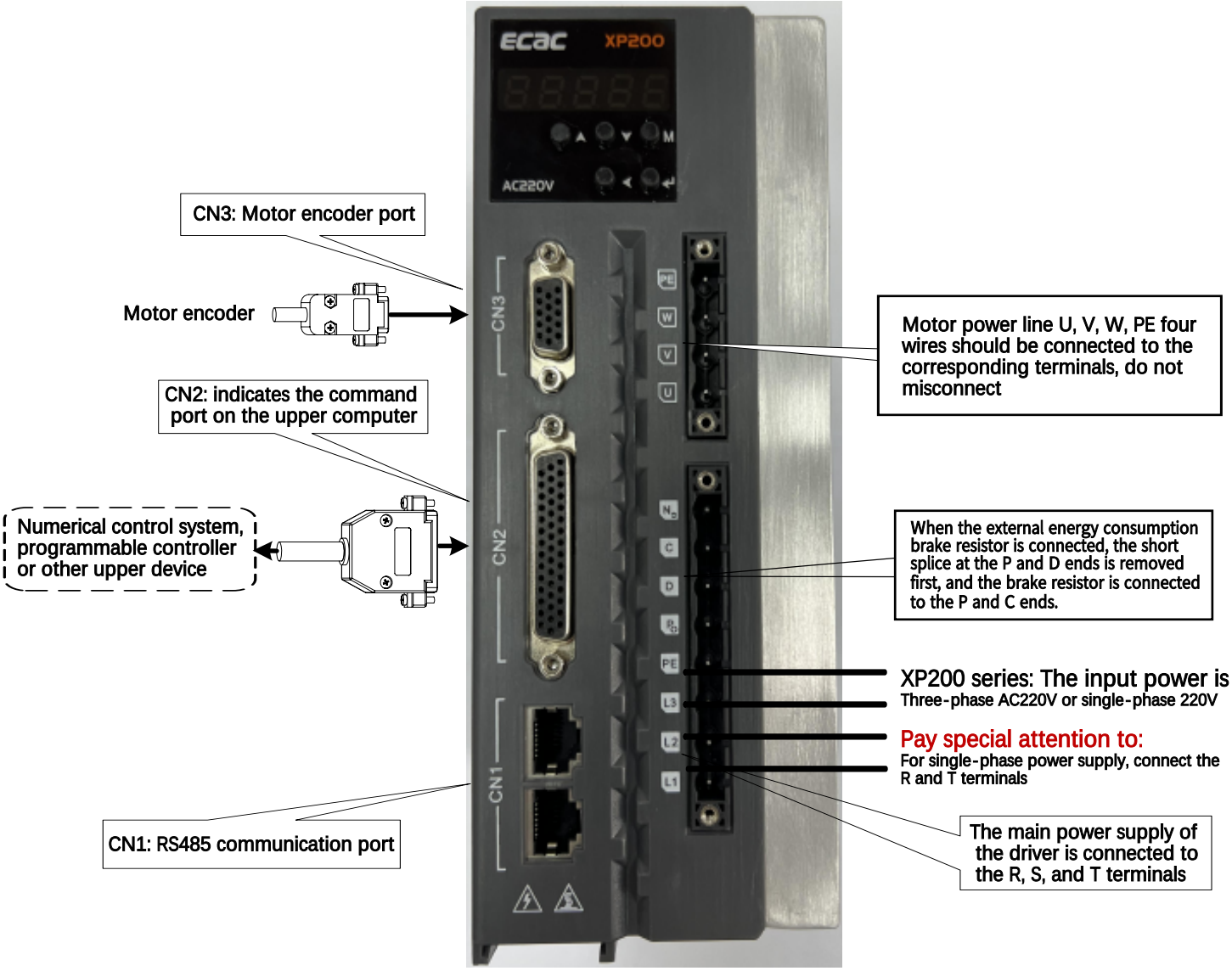

Figure 1.1 Schematic diagram of the front panel

1.3 Servo driver mounting

1.3.1 Installation environmental conditions

The environment of the servo drive installation has a direct impact on the normal function of the drive and its service life, so the installation environment of the drive must meet the following conditions:

- Working environment temperature: 0 ~ 40; Working environment humidity: 40% ~ 80% (no condensation).
- Storage temperature: -40 ~ 50; Ambient humidity: less than 93% (no condensation).
- Vibration: less than 0.5G.
- Protect against rain drips or damp environments.
- Avoid direct sun exposure.
- Prevent oil mist, salt erosion.
- Prevent corrosive liquid, gas erosion.
- Prevent dust, wadding and metal chips from invading.
- Keep away from radioactive materials and combustible materials.
- When several drivers are installed in the control cabinet, keep enough space for air flow and heat dissipation. Add a cooling fan to reduce the temperature around the servo drive. Long-term safe operating temperature below 40.
- When a vibration source is nearby (such as a punch), use a vibration absorber or install an anti-vibration rubber gasket if you cannot avoid it.
- When there are interference devices nearby, the power cord and control line of the servo drive will be interfered, which may cause the drive to misoperate. Noise filters and other anti-interference measures can be added to ensure the normal operation of the driver. However, the noise filter will increase the leakage current, so it is necessary to install an isolation transformer at the power input of the driver.

1.3.2 Installation method

- The normal mounting direction of the servo drive is vertical and upright, with the top facing up to facilitate heat dissipation.
- To install, tighten the M5 set screw at the rear of the servo drive.
- The installation interval between the servo drive and other devices is shown in the figure on the next page. In order to ensure the performance and life of the drive, please leave sufficient installation interval as far as possible.

- A cooling fan must be installed in the electrical control cabinet to ensure that vertical wind dissipates heat from the servo drive.

- When installing the electrical control cabinet, prevent dust or iron filings from entering the servo drive.

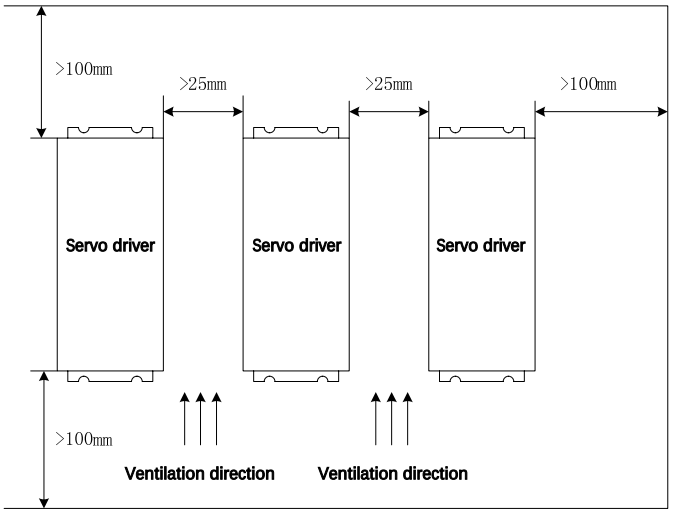

Figure 1.2 Servo driver installation diagram

1.4 Servo motor mounting

1.4.1 Installation environmental conditions

- Working environment temperature: 0 ~ 40; Working humidity: below 80% (no condensation)
- Storage temperature: -40 ~ 50; Storage humidity: below 80% (no condensation)
- Vibration: less than 0.5G.
- A well-ventilated place with little moisture and dust.
- No corrosive, ignition gas, oil and gas, cutting fluid, cutting powder, iron powder and other environment.
- A place free from water vapor and direct sunlight.

1.4.2 Installation method

- Horizontal installation: To prevent water, oil and other liquids from flowing into the motor from the electrical outlet end, please place the cable outlet under the motor.
- Vertical installation: If the motor shaft is mounted upward and the reducer is attached, pay attention to and prevent the oil in the reducer from penetrating into the motor through the motor shaft.
- The extension of the motor shaft should be sufficient, if the extension amount is insufficient , it will easily cause vibration when the motor is moving.
- When installing and disassembling the motor, do not hit the motor with a hammer, otherw ise it will easily cause damage to the motor shaft and encoder.

1.5 Motor rotation direction definition

The motor rotation direction described in this manual is defined as: facing the motor output shaft, counterclockwise rotation of the rotating shaft (CCW) is positiv e rotation, and clockwise rotation of the rotating shaft (CW) is reverse.

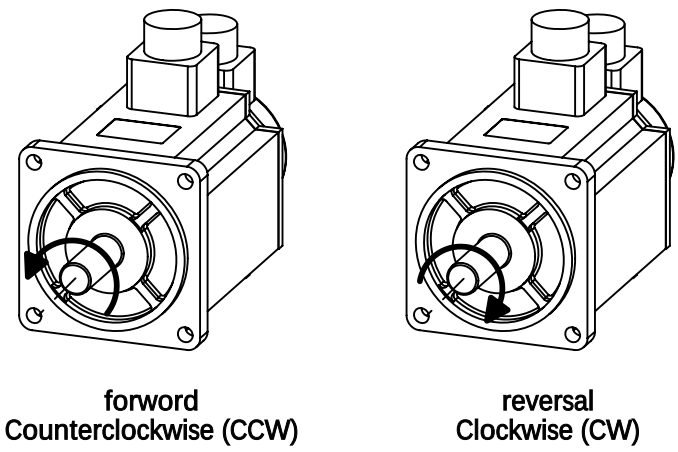

Figure 1.3 Definition of rotation direction of servo motor

Chapter 2 Wiring

2.1 System composition and wiring

2.1.1 Wiring instructions

Wiring precautions:

- Wiring materials shall be used according to wire specifications.
- Cable length, command cable within 3m, encoder cable within 20m.
- Check whether L1, L2, and L3 power supplies and cables are correct. Do not connect the 220V servo to the 380V power supply.
- Motor output U, V, W terminal phase sequence, must correspond to the corresponding terminals of the driver one by one, the wrong motor may not turn or speed. The motor cannot be reversed by switching the three-phase terminals, which is completely different from the asynchronous motor.
- It must be grounded reliably and at a single point.
- The relay installed in the output signal, the direction of the diode used for absorption should be connected correctly, otherwise it will cause failure to output the signal.
- In order to prevent the wrong action caused by noise, please add insulation transformers and noise filters and other devices to the power supply.
- Wiring the power line (power line, motor line, etc., strong current circuit) and the signal line more than 30cm apart, do not place in the same wiring tube.
- Install a non-fusing circuit breaker so that the external power supply can be cut off in time when the driver fails.

2.1.2 Wire specification

Connecting terminal	symbol	Wire specification
Connecting terminal	L1、L2、L3	1.5～2.5mm^2
Motor connection terminal	U、V、W	1.5～4mm^2
Ground terminal	PE / ⏚	1.5～4mm^2
Control signal terminal	CN1	≥0.14mm2(AWG26),Shielded wire
Encoder signal terminal	CN2	≥0.14mm2(AWG26),Shielded wire
Brake resistance terminal	P、D、C	1.5～2.5mm^2

The encoder cable must be twisted pair. If the encoder cable is too long (>20m), the encoder power supply will be insufficient. The power and ground cables can be connected by multiple wires or thick wires.

2.1.3 Description of strong current terminals

Name	Terminal symbol	Detailed description
Main circuit power supply	L1、L2、L3	Connect external AC power supply: Three-phase 220VAC-15% ~ +10% 50/60Hz
Brake resistance terminal	P、D、C	When the external brake resistor is connected, remove the short splice between the P and D terminals, and connect the brake resistor to the P and C terminals;Take care to select resistance values and power to avoid burning out the drive.
Motor connection terminal	U	Output to the motor U-phase power supply
	V	Output to motor V phase power supply
	W	Output to the motor W phase power supply
Ground terminal	PE / ⏚	Motor housing ground terminal
	PE / ⏚	Driver ground terminal

2.2CN2 Control signal terminal

CN2 control signal terminals provide the signals needed to connect to the upper controller, and the type of socket used is different depending on the driver model. The signals include:

- 6 programmable inputs, 4 programmable outputs；
- Pulse instruction input (position instruction, speed instruction)；
- Analog instruction input (speed instruction, torque instruction)；
- Encoder signal output。

2.2.1 CN2 Terminal signal description

Special note: DI1~DI6 is a programmable input port, and its function is configured by parameters Pr100~Pr105; DO1 to DO4 are programmable outputs whose functions are configured by parameters Pr108 to Pr111. For details about parameter Settings, see Section 5.4.2 of Chapter 5. For details about specific functions, see sections 5.5 to 5.6 of Chapter 5. The following table shows the factory default Settings.

Terminal number	Signal name	Mark	Feature
11	input-terminal Power supply positive	COM+	The power supply positive terminal of the input terminal is used to drive the optocoupler of the input terminal, DC12 ~ 24V, current 100mA.
9	DI1 Servo enable	SON	The servo input terminal is enabled. SONON: allows the drive to work; SONOFF: The drive is enabled off and the motor is free. Note 1: The motor must be stationary before switching from OFF to ON. Note 2: After SONON, wait at least 50ms before entering the command.
10	DI2 Alarm clearing	ACLR	Alarm clear input terminal. ARSTON: Clear system alarms; ARSTOFF: Keep the system alert. Note: Some hardware fault alarm numbers cannot be cleared by this method, and need to be powered off for maintenance, and then powered on again.

Terminal number	Signal name	Mark	Feature
34	DI3 CCW drive prohibited	CCWL	CCW(counterclockwise) drive disables input terminals. CCWL ON: The CCW drive allows the motor to rotate counterclockwise CCWL OFF: The CCW drive is prohibited, and the motor is prohibited from rotating counterclockwise Note 1: For mechanical overrun, when the switch is OFF, the CCW direction torque remains 0. Note 2: This function can be shielded by setting parameter Pr097, and the user does not need to connect this terminal to enable the CCW driver to allow.
8	DI4 CW drive disable	CWL	CW(clockwise) drive disables input terminals. CWL ON: CW drive allowed, motor can be rotated clockwise. CWL OFF: The CW drive is prohibited, and the motor is prohibited from rotating clockwise. Note 1: For mechanical overrun, when the switch is OFF, the CW direction torque remains 0. Note 2: This function can be blocked by setting parameter Pr097, the user does not need. Connecting this terminal also enables the CW driver to allow.
33	DI5 deviation count Device reset	CLE	In position control mode (parameter Pr004=0), the position deviation counter clears the input terminal. CLE ON: During position control, the position deviation counter clears to zero.
32	DI6 command pulse prohibited	INH	In the position control mode (parameter Pr004=0), the position instruction pulse is prohibited from entering the terminal. INH ON: Instruction pulse input prohibited: INH OFF: The instruction pulse input is valid.
7	DO1 servo ready Good output	RDY+	Servo ready output terminals. SRDY ON: The main power supply is normal, the driver has no alarm, and the servo is ready to output ON (output conduction); SRDY OFF: The main power is not turned OFF or the driver has an alarm, the servo is ready to output OFF (output cutoff)
6		RDY−	
5	DO2 servo alarm output	ALM+	Servo alarm output terminal. ALMON: the servo driver has no alarm, the servo alarm output is ON (output conduction); ALMOFF: The servo drive has an alarm, and the servo alarm output is OFF (output cut-off).
4		ALM−	
3	DO3 Positioning is complete	COIN+	The output terminal is located. COIN ON: When the position deviation counter value is in the set positioning range, the positioning is completed and output ON (output conduction), otherwise, output OFF(output cutoff).
2		COIN−	
1	DO4 mechanical brake release	BRK+	When the motor has a mechanical brake (loss retainer), this port can be used to control the brake. BRKON: The brake is energized, the brake is invalid, the motor can run; BRKOFF: The brake is off, the brake is effective, the motor is locked, and the motor cannot run.
26		BRK−	

Terminal number	Signal name	Mark	Feature
35	Command pulse Common end	PULLHI	24V pulse command common end
41	Command pulse PLUS input	PULS＋	External instruction pulse input terminal. Note 1: The pulse input mode is set by parameter Pr035, Pr035=0, instruction pulse + symbol mode (default state); Pr035=1, CCW/CW instruction pulse mode; Pr035=2, quadrature pulse mode.
43		PULS－	
37	Instruction pulse SIGN input	SIGN＋	
39		SIGN－	
16	Simulate speed instruction input	AS＋	External analog command input terminal, differential mode, input impedance 10kΩ, input range -10V ~ +10V.
18		AS－	
14	simulatively	GNDA	Simulates the input ground wire.
21	Encoder A trust number	OA＋	Encoder ABZ signal differential drive output; Non-isolated output (non-insulated).
22		OA－	
25	Encoder B trust number	OB＋	
23		OB－	
13	Encoder Z trust number	OZ＋	
24		OZ－	
44	Encoder Z phase Open collector exportation	CZ	The encoder Z signal is output by the open-circuit collector. When the encoder Z signal appears, the output is ON (output conduction), otherwise the output is OFF (output cut-off). Non-isolated output (non-insulated);In the upper computer, usually the Z signal pulse is very narrow, so please use high-speed optocoupler to receive.
29	Encoder common ground	GND	Encoder common ground wire.
shell	Shielded ground	FG	Shielded ground terminal.

2.2.2CN2 Terminal interface type

The following will introduce the interface circuit of CN2 and the connection method with the upper control device.

1. **Digital Input interface (C1)**

The digital input interface circuit can be controlled by switches, relays, open collector triodes, photocouplers, etc. Low current relays should be selected to av oid poor contact. External voltage range DC12V ~ 24V.

C1-1:Switch input	C1-2:Open collector triode
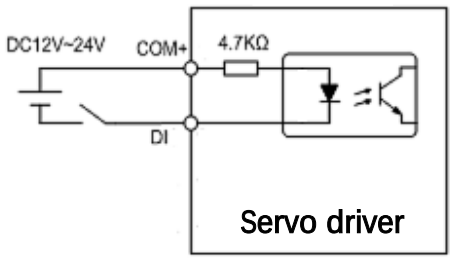	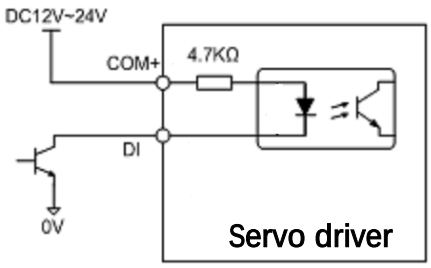

2. Digital Output Interface (C2)

The output circuit uses Darlington photoelectric coupler, which can be connected with relays and photoelectric couplers：

- The power supply is provided by the user, such as if the power supply is reversed, it will cause damage to the drive.
- The maximum external power supply is 25V, the maximum output current is 50mA, and the total current of the three channels does not exceed 100mA.
- When an inductive load such as a relay is used, a diode should be added in parallel with the inductive load. If the polarity of the diode is opposite, the driver will be damaged.
- When it is switched on, there is a voltage drop of about 1V, which cannot meet the TTL low level requirements, so it cannot be directly connected with the TTL circuit.

C2-1:Relay	C2-2:Photoele
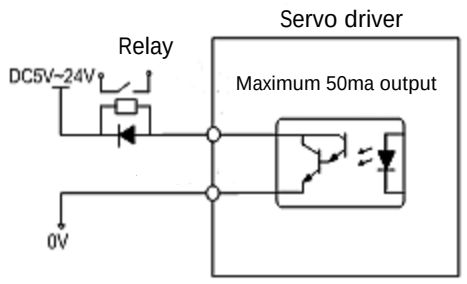	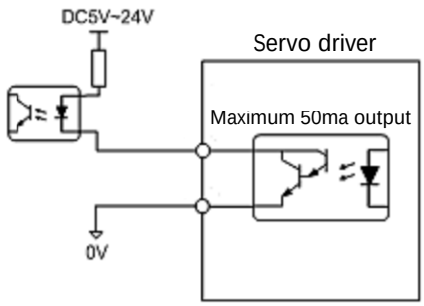
You have to add a continuing diode	

3. Position Pulse command interface (C3)

There are two kinds of connection methods: differential drive and single-ended drive. Differential drive connection is recommended. Use twisted pair cables for connection. Drive current 8~15mA, set by parameter P35 Working mode: pulse cross symbol, forward/reverse pulse, orthogonal pulse.

C3-1: differential drive	C3-2: single-end drive
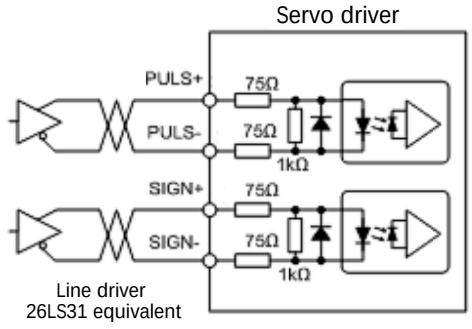	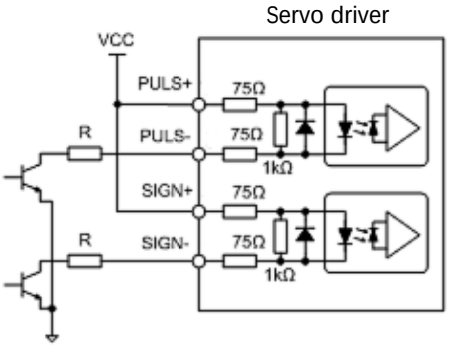
Maximum pulse frequency 500kHz(kpps) ; Not to be disturbed, this connection is recommended.	Maximum pulse frequency 200kHz(kpps); Recommended resistance R Resistance value:

VCC	R
5V	82Ω~120Ω
12V	510Ω~820Ω
24V	1.5kΩ~2kΩ (There is a resistance in the driver)

4. Encoder Signal Line Drive Output (C5)

After dividing the frequency of the encoder signal, it is output to the upper controller through line drive (LineDriver).

C5-1:Long line receiver reception	C5-2: Optocoupler reception
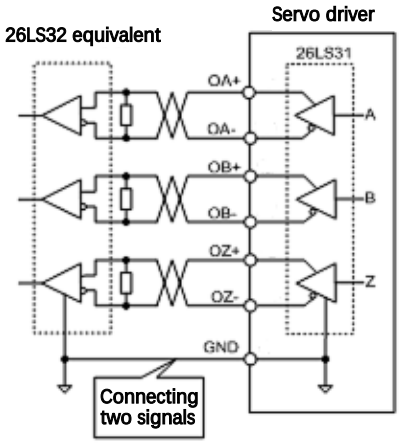	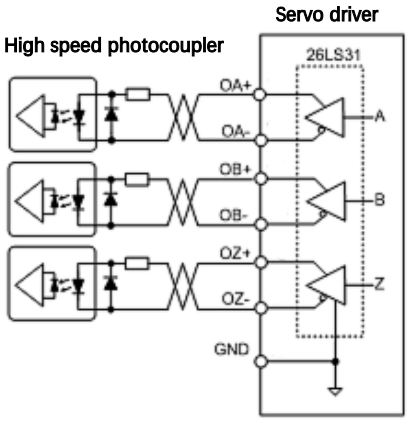
The upper controller uses the AM26LS32 equivalent as a receiver, which must be connected to a terminal resistor with a resistance value of 220Ω ~ 470Ω ; The driver encoder signal ground (GND) must be connected to the upper controller sign al ground.	The upper controller uses a high-speed photocoupler (e.g. 6N137) with a current limiting resistor resistance of about 220 Ω.

5. Encoder Z signal collector open output (C6)

The encoder Z signal is output to the upper controller through the open collector. Because of the narrow pulse width of the Z signal, use a high-speed optocoupler to receive it

C6: encoder Z signal collector open output
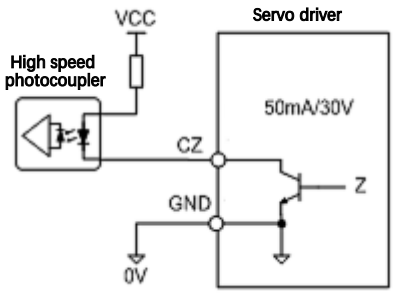
The maximum external power supply is 30V and the maximum output current is 50mA.

2.3 Front panel terminal wiring diagram

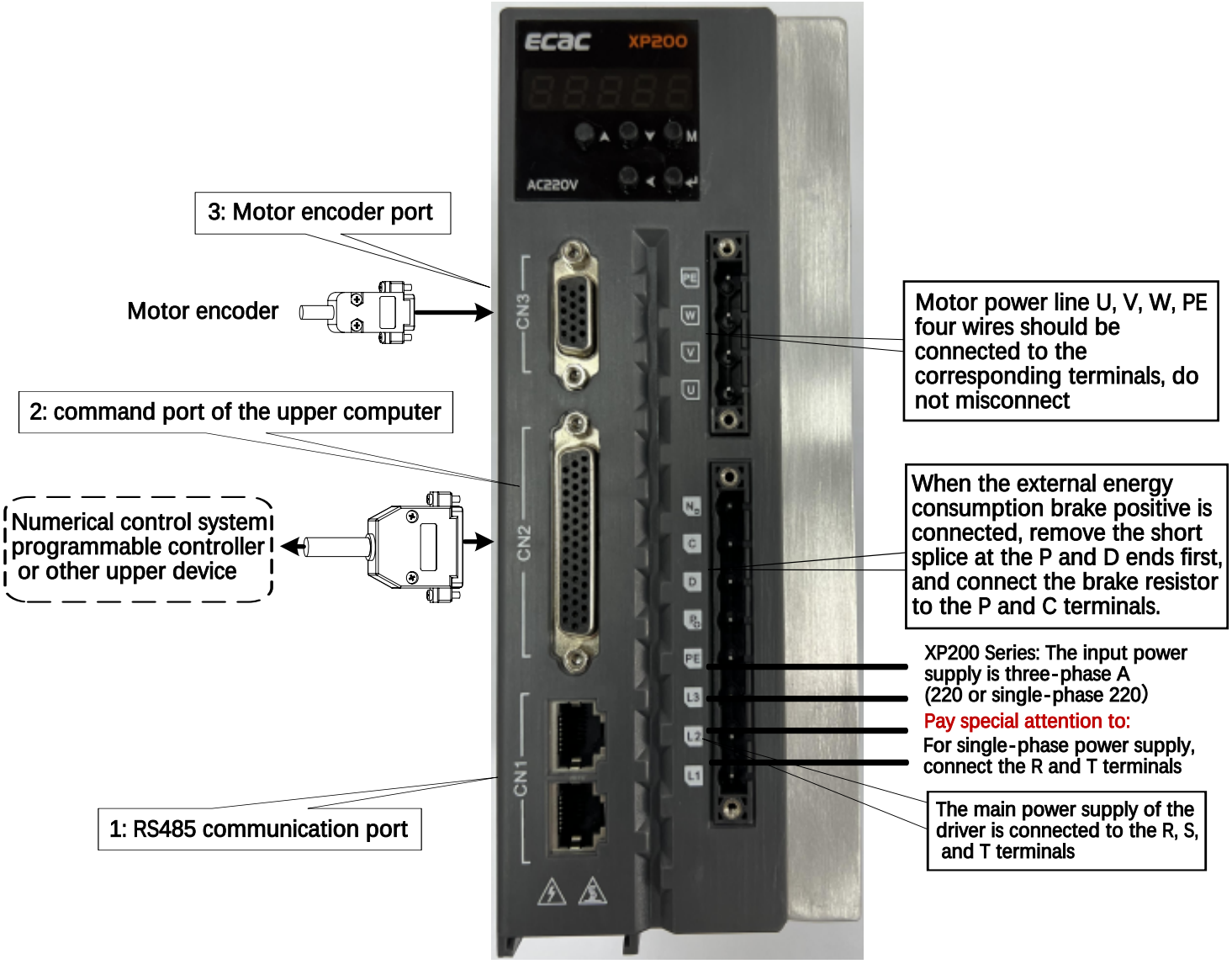

2.4 Brake resistance specifications

Brake resistance specifications

(Standard 220V servo with built-in resistance, according to the load can be optional external brake resistance)

Driver type	(infrequent start and stop) The configuration is recommended (Use only built-in resistors)	(Frequent start and stop) This parameter is recommended (and use external resistors together or only use external resistors)
XP200-20PL	100 Euro 60W (built-in)	≥47 OHM, power greater than 500W
XP200-30PL	47 Euro 100W (built-in)	≥47 OHM, power greater than 500W

2.5 Control port CN2 and encoder port CN3 definition diagram

This side signal connects to the PC controller

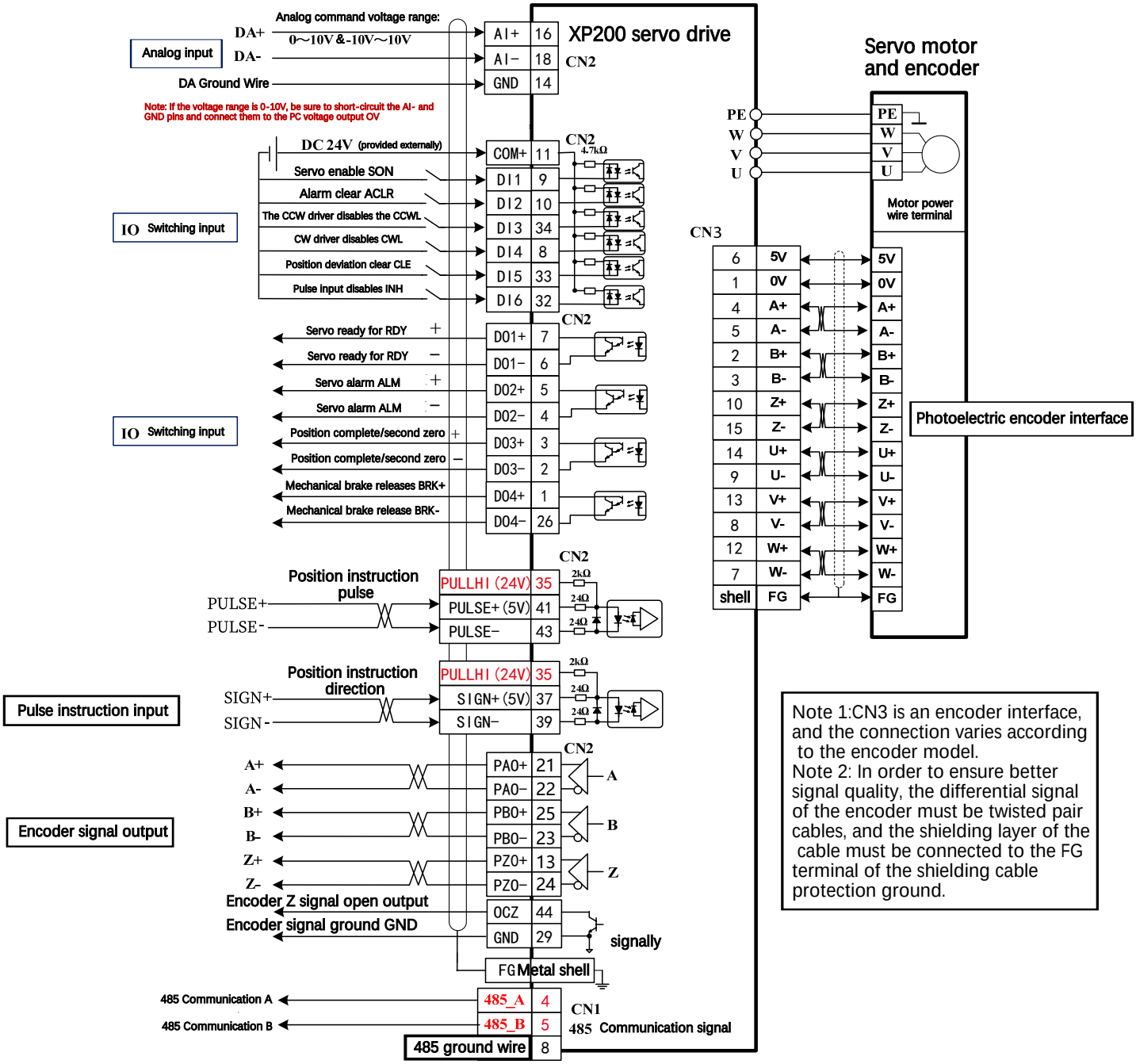

Note: The factory Settings of DIx/DOx are low and can be changed to high. The DIx/DOx functions can be redefined as required. Parameters P100 to P107 are valid for DIx and high and low levels, and parameters P108 to P113 are valid for DO.

Pay special attention to:

If the pulse command signal is a 24V power supply, the 35 pin of CN2 is connected to 24V , the pulse signal is negatively connected to the 43 pin of CN2, and the direction signal is negatively connected to the 39 pin of CN2.

If the PULSE command signal is a 5V power supply, do not connect to pin 35 of CN2, PULSE+ connect to pin 41 of CN2, pulse - connect to pin 43 of CN2, SIGN+ connect to pin 37 of CN2, SIGN connect to pin 39 of CN2.

Chapter 3 Panel Operations

3.1 Driver panel description

3.1.1 Panel composition

The XP200 series panel consists of 5 LED digital tube displays and 5 keys ▲、▼、◀、M、↵ used to display various system status setting parameters.

All operations are layered operations, which are expanded layer by layer from the main menu. The operation panel is shown as follows:

XP200 Operation panel

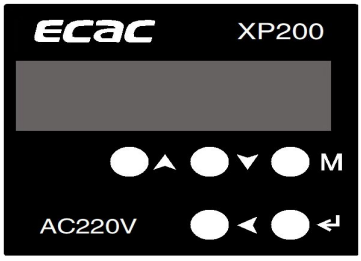

3.1.2 Panel description

symbol	name	Feature
POW	Power status indication	XP200 The decimal point of the second digital tube from the left is bright, indicating servo undervoltage
RUN	Operational status indication	XP200 The decimal point of the first digital tube from the left is bright, indicating that the servo is enabled
▲	Multiply key	Add a serial number or value; Long press has a repetitive effect.
▼	Decrease key	Reduce the sequence number or value; Long press has a repetitive effect.
M	escape	Menu exit; The operation was canceled.
↵	Confirm key Enter	Menu entry; Confirm parameter modification or operation.
◀	Shift key	This parameter is used to quickly change the parameter number or value。

3.1.3 Value Display

The value uses 5 digital tube displays, the minus sign is displayed in front of the value to indicate negative numbers, if it is 5 negative numbers, then all decimal points are lit to indicate negative numbers. Some display items have a prefix character, if the number of digits is too long to occupy the position of the prefix character, the prefix character will not be displayed, only the value is displayed, the specific display meaning is as follows:

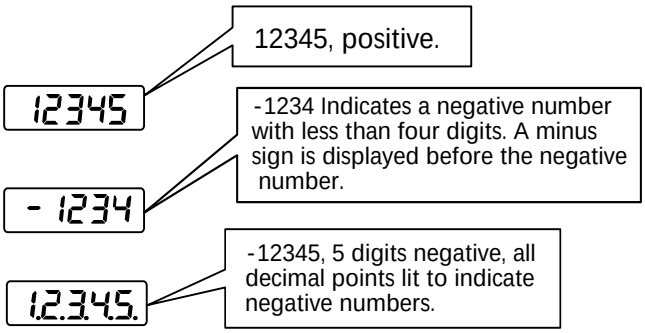

3.2 Main Menu

The first layer is the main menu, which has four operations. Use ▲、▼ keys to change the mode, press ↵ keys to enter, Press M to return to the main menu from Level 2.

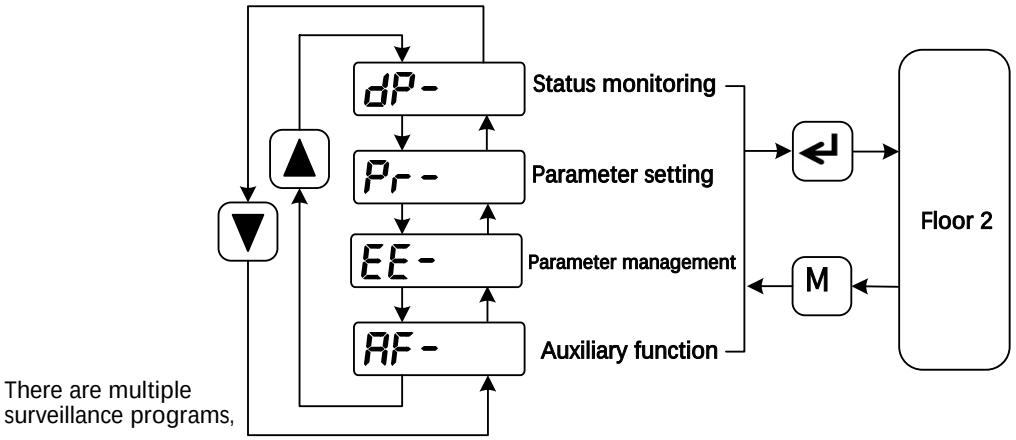

3.3 Status monitoring

Select Status Monitoring from the main menu "dP-", Press ↵ key Enter the monitoring mode. The user uses ▲ and ▼ keys to select the required display items, and then press ↵ keys to enter the specific display state. The meanings of status monitoring items are as follows:

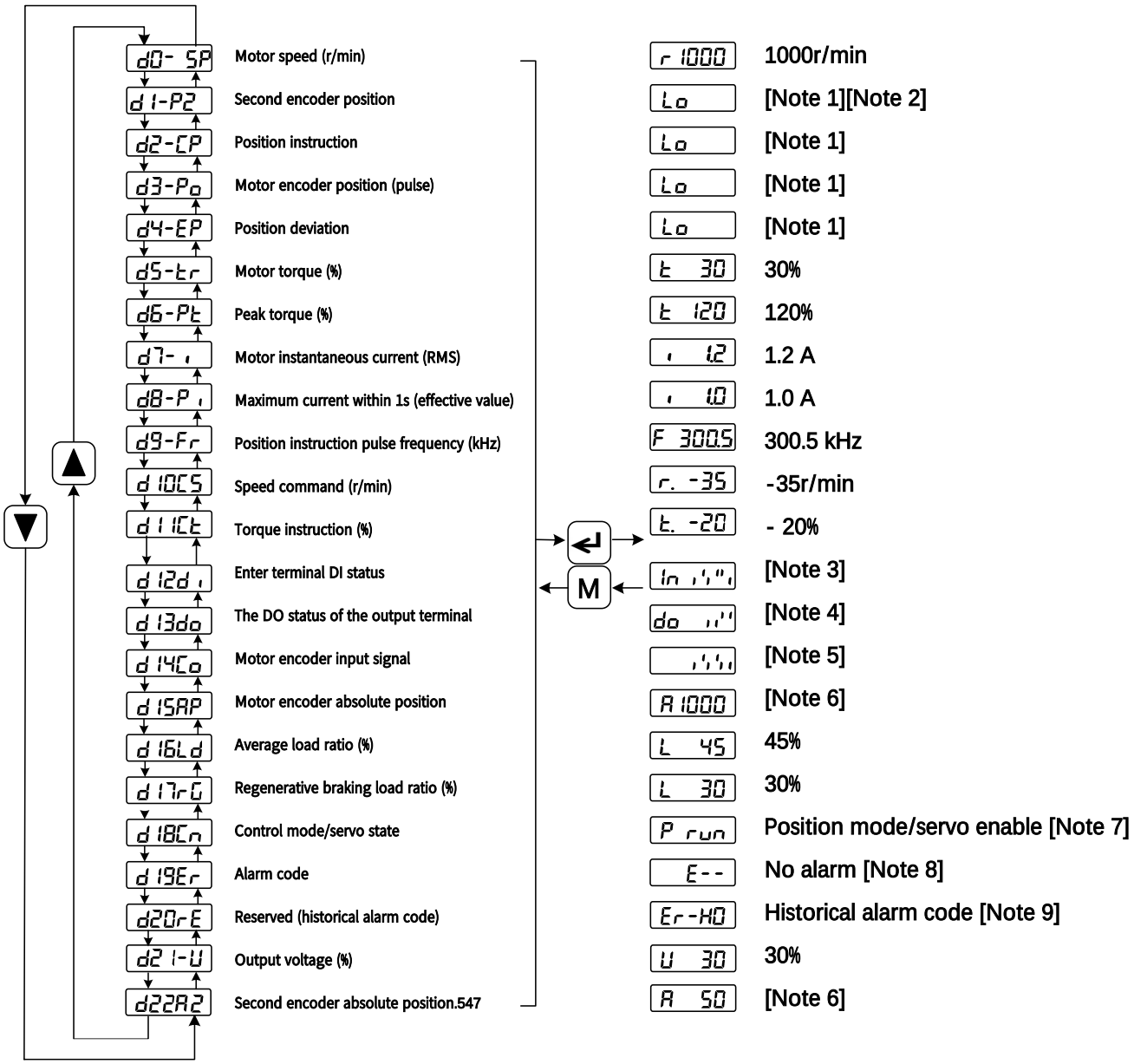

1.32-bit binary numeric display [Note 1]

The 32-bit binary number ranges from -2147483648 to 2147483647, which is represented by the combination of the low and high bits. Select the low and high bits from the menu, and use the formula in the figure to synthesize the complete value.

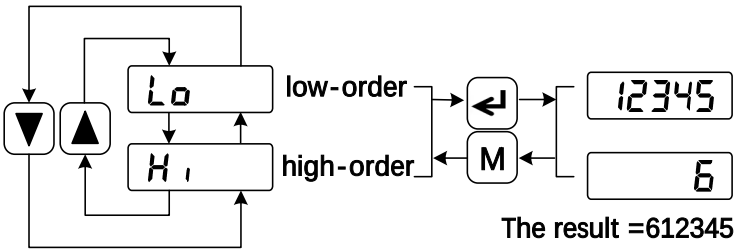

32-bit value = high value X100000+ low value

2. Pulse unit [Note 2]

The pulse of the original position instruction refers to the number of input pulses, without electronic gear transformation. The pulse unit for other items is the encoder pulse unit. Take the use of 2500 line encoder as an example:

Encoder pulse unit = encoder resolution

= 4x number of encoder lines

= 4 x 2500(pulse / rev)

=10000(pulse /rev)

3. Input terminal DI[Note 3]

The vertical line of the digital tube indicates the status of a bit, the upper stroke ON the vertical line indicates ON, and the lower stroke indicates OFF.

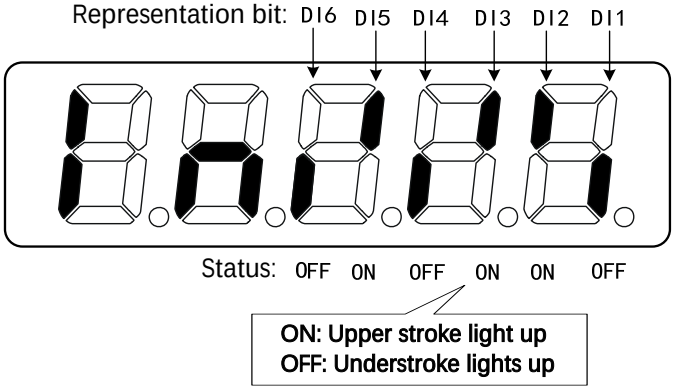

4. Output terminal DO[Note 4]

The vertical line of the digital tube indicates the status of a bit, the upper stroke ON the vertical line indicates ON, and the lower stroke indicates OFF.

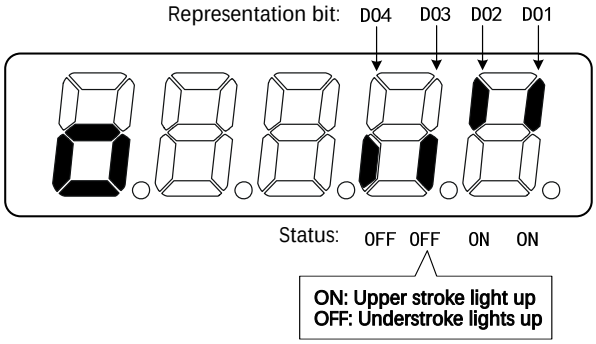

5. Encoder input signal [Note 5]

The vertical line of the digital tube indicates the state of a bit, the upper stroke of the vertical line indicates a high level, and the lower stroke indicates a low level. (Note: absolute position encoder, this display is meaningless)

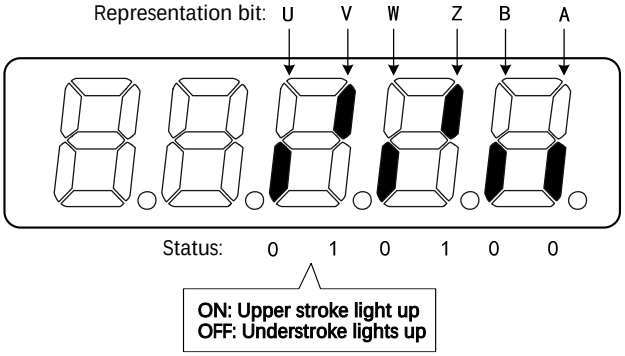

6. Rotor single-turn position [Note 6]

Represents the position of the rotor relative to the stator in one revolution, i n one to one cycle, the minimum resolution of the encoder is the unit, and the e ncoder Z pulse is the origin. 2500 line encoder: Its range is 0 ~ 9999 (base 10), a nd the value is 0 when the Z pulse appears.

7. Control mode/servo state [Note 7]

d 18Cn The display content represents the current control mode and servo status, the XP200 drive will automatically display the control mode/servo status and continue for 10 seconds when starting up (press any key to exit the display mode),Then automatically jump to display motor speed r 0。

The specific meanings of control mode and servo state are as follows：

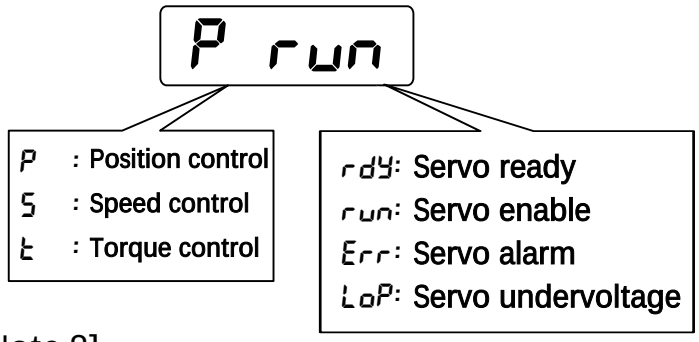

8. Alarm code [Note 8]

No alarm shows two minus signs. There is an alarm display alarm number, and flashing. When the alarm appears, the display will automatically enter the status monitoring and display the alarm number, but other operations can be performed through the keyboard, when it is not in the monitoring state, the decimal point of the right-most digital tube flashes to indicate that there is an alarm. The following is an example:

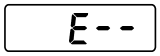

Alarm free

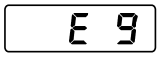

Flicker Alarm number 9

9. Historical alarm code [Note 9]

The historical alarm code displays the last 10 alarm contents of the driver, no alarm displays two minus signs, and there is an alarm displays the alarm number. When an alarm occurs, the drive automatically updates and stores the alarm number. Historical alarm code viewing operation and specific display content are described as follows:

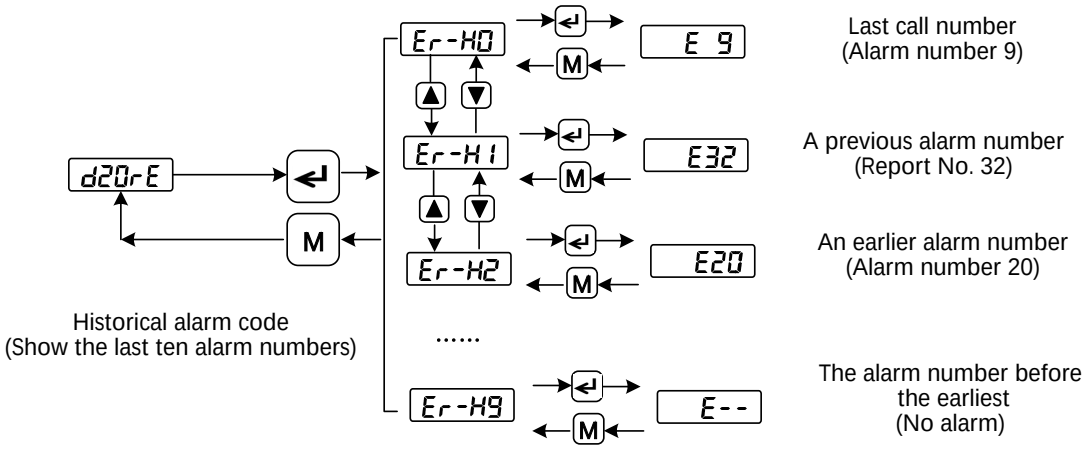

The method of clearing the historical alarm code is as follows: In the case of no alarm, set parameter Pr119 to 4 first, and then follow the following steps to clear all the historical alarm code.

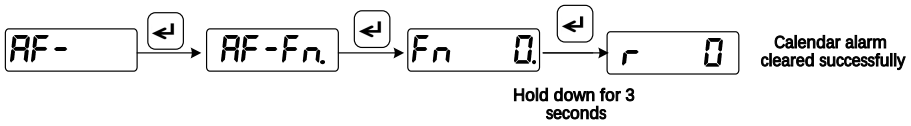

3.4 Parameter Settings

Parameters are represented by parameter segment + parameter number. Hundreds digits are the segment number, and tens and ones digits are the parameter number. For example, if the parameter Pr105 is 1 and 05, the digit tube is displayed as "Pr 105".

Select Parameter Setting "Pr -" from the main menu ▲ and ▼ press to enter the parameter setting mode. First, use the ↵ key to select the parameter segment.

After selecting it, press the ↵ key to enter the parameter number selection of the segment. Then use the ▲ and ▼ key to select the parameter number. After selecting ↵, press the key to display the parameter value.

Using ▲ and ▼ key can modify the parameter value, press ▲ and ▼ key once, parameter increase or decrease 1, press and hold ▲ and ▼ key, parameter can continuously increase or decrease.

Use ▼ key to change the current modified parameter bit (one, ten, hundred, thousand or ten), when a parameter bit is in the modified mode, the digit corresponding to the digit is lit, the digit is blinking when the parameter value is modified, press ↵ key to ensure that the modified value is valid, at this time the digit is steady on and does not blink.

The modified value is immediately reflected in the control (some parameters need to be saved and powered on to take effect).

After the modification, you can continue to modify the parameter. Press M to return to the parameter number selection state. If you are not satisfied with the value being modified, do not press the ↵ key to determine, you can press the M key to cancel, and the parameter is restored to the original value. The modified parameters are not saved to the EEPROM. If you want to permanently save the modified parameters, use the parameter write operation in Parameter management.

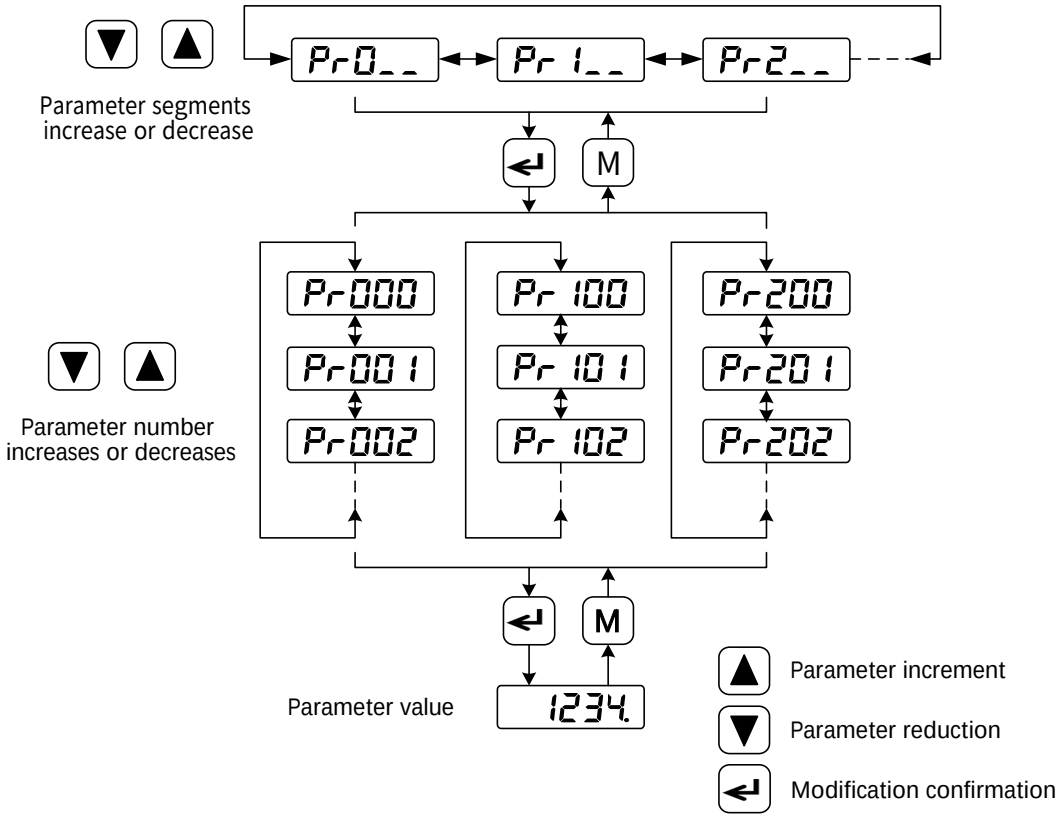

3.5 Parameter management

Parameter management mainly deals with the operation between the parameter table and EEPROM, select Parameter management under the main menu "EE- ", Press ↵ to enter the parameter management mode

Select operation mode, there are 3 modes, use the ▲、▼ key to select. After selecting the operation, press the ↵ key and hold it for more than 3 seconds to activate the operation. After the completion, you can press the M key to return to the operation mode selection state

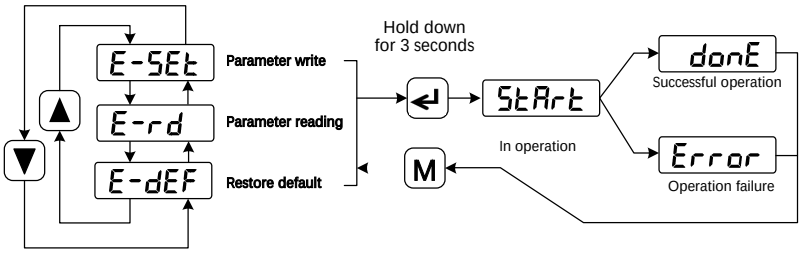

- **Parameter write**

Indicates that parameters in the parameter table are written to the EEPROM. If the parameter values in the parameter table are changed after the user modifiable the parameters, they will be restored to the origi nal values after the next power-on. If you want to permanently change the parameter values, you need to w rite the parameters in the parameter table to the EEPROM. The modified parameters will be used when the PROM is powered on.

- **Restore default**

Indicates that the default values of all parameters are read into the parameter table and written into the EEPROM. The default parameters will be used for the next power-on. This operation restores all parameters to factory Settings when the parameters are out of order. Because the default values of the parameters corresponding to different driver models and motor models are different, the correctness of the motor code (parameter Pr002) must be ensured before using the restore default parameters.

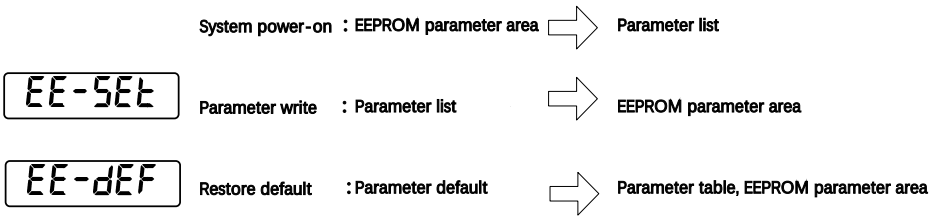

3.6 Auxiliary function

3.6.1 Function description

Select Accessibility under the main menu "AF- ", Press ↵ to enter the auxiliary function mode. Select operation mode with ▲ and ▼ keys. After selecting the operation, press ↵ to enter the corresponding function, and press M to return to the operation mode selection state.

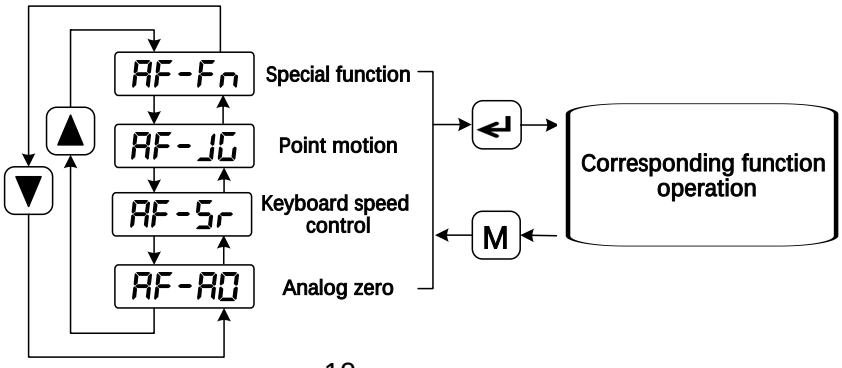

3.6.2 Analog zero

When using this operation, the driver automatically detects the analog zero bias and writes the zero bias value to the parameter Pr047(or Pr054). This operation has already saved the zero-bias parameters to the EEPROM, so no further parameter writing is required.

The operation method is as follows :(1) the host computer first outputs the OV analog quantity, enables the servo drive, and then selects the analog quantity to zero "AF-AD ", Press ↵ to enter.

(2) If the drive control mode is analog speed mode, the speed analog value is set to zero by selecting from the menu "0-SPd" ; If the drive control mode is analog speed mode, the speed analog value is set to zero by selecting from the menu "0-tr9" ;

(3) After selecting the operation, press the ↵ key and hold for more than 3 seconds to activate the operation. After the completion, you can press the M key to return to the menu selection state, which is displayed as follows:

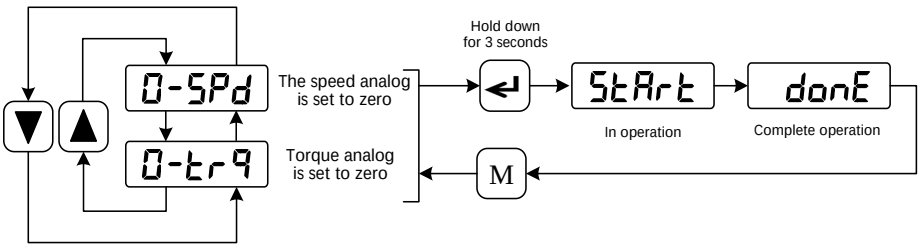

3.6.3 inching (JOG) running

First power ON the drive, confirm that there is no alarm and any abnormal situation, the servo enable (SON) on, the RUN indicator light on, then the motor excitation, in the zero speed state.

In the auxiliary function, select the point operation "AF-JG" , Press ↵ key to enter JOG operation mode. The click prompt is "J" , the numerical unit is r/min, and the speed instruction is provided by the key.

Press the ▲ key and hold, the motor runs at JOG speed forward (CCW), release the key, the motor stops, maintain zero speed: Press ▼ key and hold, the motor runs at JOG speed reverse (CW), release the key, the motor stops, maintain zero speed.

Note: JOG speed is set by parameter Pr076 (in r/min), servo enable is controlled by external switching quantity or by parameter Pr098 (set to 1 drive internal force enable, set to 0 not enable).

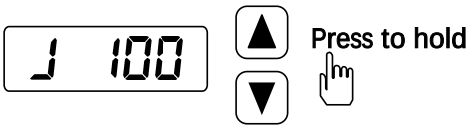

3.6.4 Keyboard speed control

First power ON the drive, confirm that there is no alarm and any abnormal situation, the servo enable (SON) on, the RUN indicator light on, then the motor excitation, in the zero speed state. In the auxiliary function, select keyboard speed control "AF-Sr" , Press ↵ to enter the keyboard speed control mode.

Keyboard speed prompt Yes "r." , The unit of value is r/min, and the speed instructio n is provided by the key.Use the ▲、▼ key to change the speed command, and the mot or will run at the given speed. Positive numbers indicate forward rotation (CCW), negative n umbers indicate reverse rotation (Cw), and the minimum given speed is 0.1r/min.

Instruction increase and decrease

Note: Keyboard speed control needs to set the control mode to speed control mode, that is , set parameter Pr004 to 1(power off and restart takes effect); Servo enable is controlled by external switching quantity or by parameter Pr098 (set to 1 drive internal force enable, set to 0 not enable).

3.7 The default value of the parameter is restored

Use the Restore Default parameters (factory parameters) function when:

- Parameters are messed up, and the system cannot work normally.
- Replace the motor, the new motor and the original motor model is different;
- The driver and motor code (parameter Pr002) do not match due to other reasons.

To restore the default parameters, perform the following steps:

First, ensure that the drive servo enable (SON) is OFF, change the password (parameter Pr000) to 316, and check whether the motor code (parameter Pr002) is correct. If yes, go to Step 3. If no, go to Step 2.Modify the motor code (parameter Pr002) to the required motor series and model, the motor code is referred to the motor adaptation table in Section 7.2;

Step 3: Go to Parameter Management and do one of the following:

(1) Restore the default values of some parameters

Only the default parameters related to the drive and motor are restored, and other user parameters are retained. Perform the parameter write operation in Parameter management. This operation restores the default value only when the password is 385 (or 316) and the motor code is modified. In other cases, only the parameter write function is available.

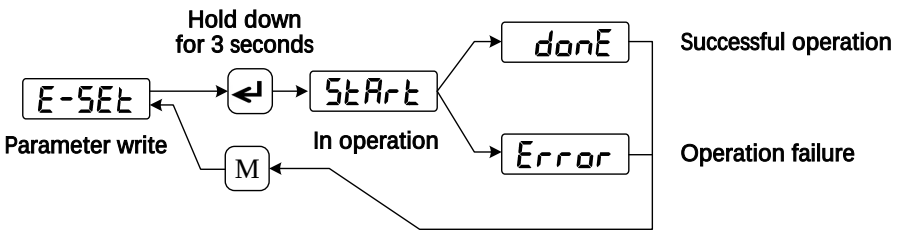

Only the default values related to the drive and motor are restored

(2) Restore the default values of all parameters

All parameters are restored to their default values. The modified parameters are also restored to their factory default values. Restore the default value in Parameter management.

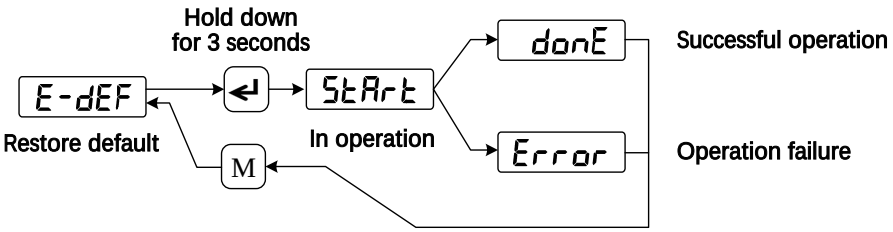

Restore the default values of all parameters

Turn off the power, power it on again, and you can work.

Chapter 4 Operation

4.1 No-load test run

The purpose of the trial run is to confirm that the following things are correct:

- Driver power distribution;
- Servo motor power line wiring;
- Encoder wiring;
- Servo motor running direction and speed.

Special note: This series of servo driver adopts the integrated design of control power suppl y and strong power supply. In order to successfully use the driver, please carefully read the working sequence diagram in section 4.7, and the upper computer controller should strictly follow the requirements of the sequence diagram at this time.

4.1.1 Wiring and inspection

Before powering on, confirm the following:
Motor no load, do not add load on the motor shaft, has been installed on the machine, please remove the connector; Due to the impact of the motor acceleration and deceleration , the motor must be fixed;
Whether the wiring is correct, especially whether the driver U, V, W corresponds to the motor U, V, W wiring one by one, and whether the driver L1, L2, L3 wiring is correct;
Whether the input voltage meets the requirements indicated on the nameplate;
Encoder cable connection is correct.
If the servo drive is a standard application, refer directly to Chapter 8 for quick commissioning and application.

4.1.2 Set the motor code

Switch on the main circuit power supply, the display panel of the driver is lit, if there is an alarm, please check the connection. Set the motor code parameters as follows:

1、Change the operation password(parameter Pr000) to 316；

2、Set the motor code according to the motor model（parameter Pr002），Motor model code refer to Section 7.2 Motor Adaptation Table；

3、Enter parameter management and restore the default value, as shown in the following figure:

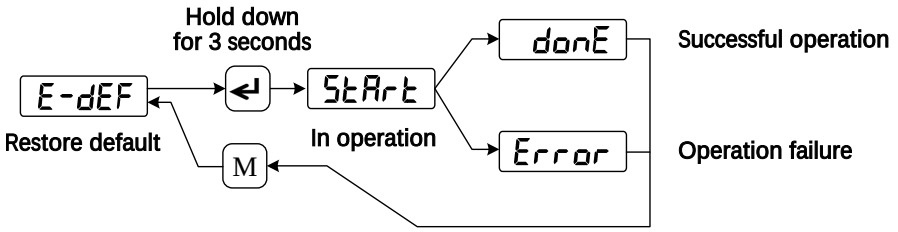

Restore the default values of all parameters

Special note: Restoring default values must be performed when the drive is not enabled, otherwise it will be displayed “Error”.

4. Turn off the power after the display operation is successful, and power it on again after the display on the driver panel is off. The trial operation can be carried out.

- Keyboard speed test run（Fn -20）；
- JOG point test run；

4.1.3 Keyboard speed test run（Fn -20）

1. Electrify

Switch on the main circuit power supply, the display panel of the driver is lit, if there is an alarm, please check the connection.

2. Controls

After confirming that there is no alarm or any abnormal situation, perform the following operations according to the following figure:

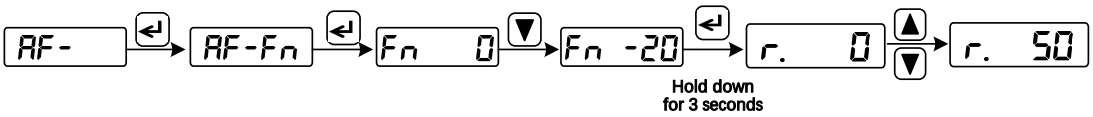

The keyboard speed control prompt is "r.", the value unit is r/min, and the speed instruction is provided by the key. Use the ▲、▼ key to change the speed command, and the motor will run at the given speed.Positive numbers indicate forward rotation (CCW), negative numbers indicate reversal (CW), and the minimum given speed is 0.1r/min.

Instruction increase and decrease

After the keyboard speed adjustment test run is not abnormal, the mechanical load can be connected and the next debugging can be carried out under the control instruction of the upper computer controller.

4.1.4 JOG Point test run

1. electrify

Switch on the main circuit power supply, the display panel of the driver is lit, if there is an alarm, please check the connection.

Switch on the main circuit power supply, the display panel of the driver is lit, if there is an alarm, please check the connection. After confirming that there were no alarms or anything unusual,Set " Pr098 " to " 1 ", Then the servo is enabled (SON)ON, and the motor is excited at zero speed.

In Accessibility, select Tap Run "AF-JG", Press ↵ key to enter JOG operation mo de. The click prompt is "J", The unit of value is r/min, and the speed instruction is prov ided by the key :

Press the ▲ key and hold, the motor runs according to JOG speed forward (CCW), release the key, the motor stops, maintain zero speed; Press the ▼ key and hold, the motor runs according to JOG speed reversal (CW), release the key, the motor stops and maintains zero speed.

JOG speed is set by parameter Pr076 , The default speed is 100r/min. If the motor runs normally, it can proceed to the next step (in conjunction with the upper computer controller).

4.2 Position Control

Position control is used in systems that require precise positioning, such as CNC machine tools, textile machinery, etc. The source of the position instruction is the pulse instruction, by the input terminal PULS+, PULS- and SIGN+, SIGN- i nput pulse. You need to connect cables correctly according to the position contr ol wiring diagram and actual requirements, and then set the position control par ameters. This manual gives a simple example of position control as follows:

4.2.1 Position control wiring diagram

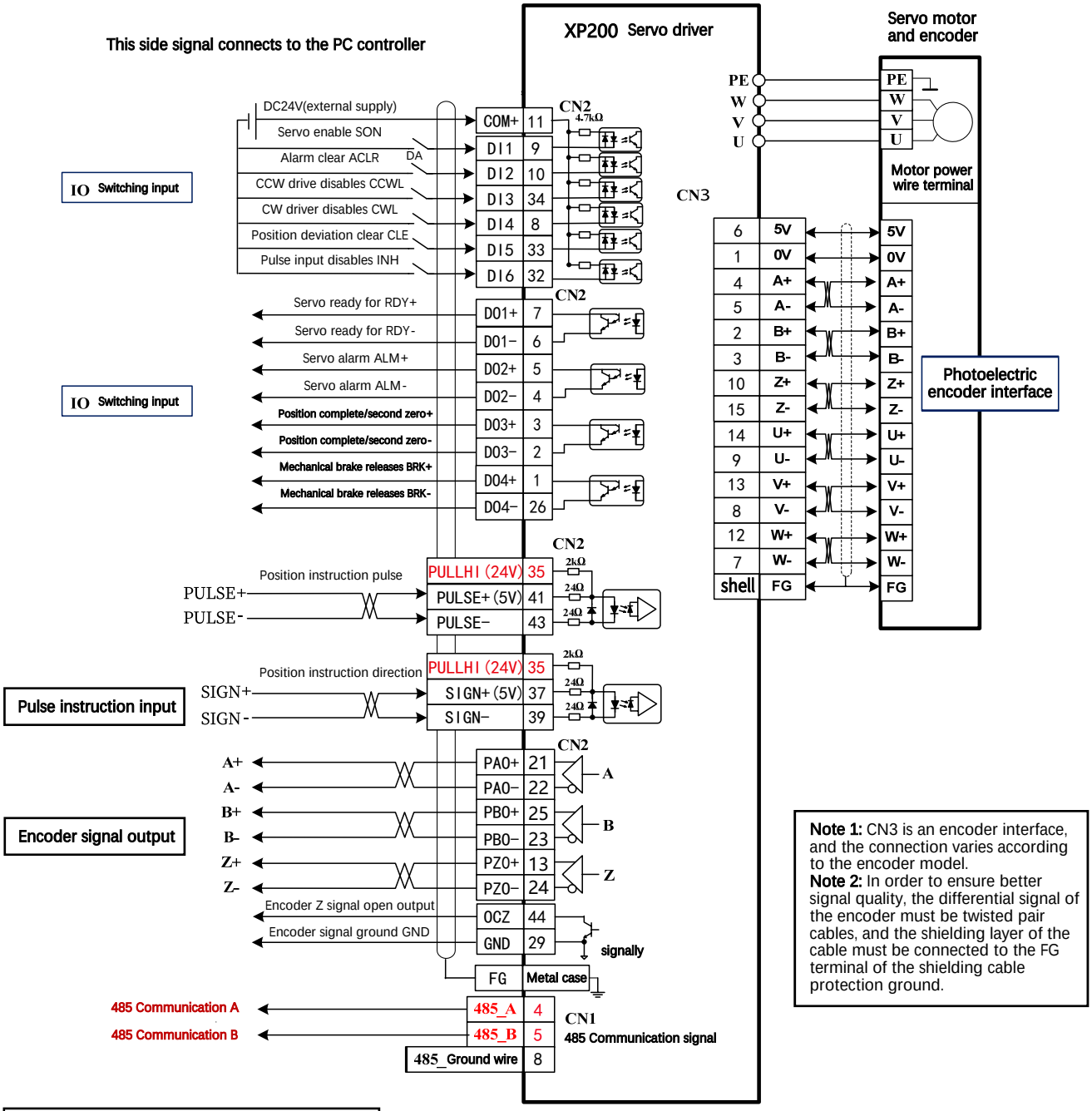

Note 1: CN3 is an encoder interface, and the connection varies according to the encoder model.
Note 2: In order to ensure better signal quality, the differential signal of the encoder must be twisted pair cables, and the shielding layer of the cable must be connected to the FG terminal of the shielding cable protection ground.

Note: The factory Settings of DIx/DOx are all low efficiency, and users can modify the DIx/DOx functions to high efficiency as required. Parameter P100-P107 is valid for DIx functions and high and low levels, and parameter P108-P113 is valid for DOx functions and high power.

In this example, the parameters are set as follows: (Use the factory defaults for other parameters.)

Argument	Name	Set value	Default value	Parameter description
Pr004	Control mode	0	0	Set to position control mode
Pr097	Ignore drive disable	0 (Use driver prohibited)	3 (Ignore drive disable)	Set to 0 to use forward drive Disable (CCWL) and Reverse drive Disable (CWL). If the value is set to 3 and the positive and negative limits are ignored, the CCWL and CWL can not be connected. The user needs to set this parameter correctly according to the actual usage, see Section 4.6 for details.

4.2.2 Location Instruction

1. Parameters related to position instructions

Argument	name	Parameter Range	Missing province	Unit	Apply
Pr029	Position command pulse electronic gear first molecule	1～32767	1		P
Pr030	Position command pulse electronic gear denominator	1～32767	1		P
Pr035	Position instruction pulse input mode	0～2	0		P
Pr036	Position instruction pulse input direction	0～1	0		P
Pr038	Position instruction pulse signal filtering coefficient	0～3	0		P
Pr039	Position instruction direction signal filtering coefficient	0～3	0		P
Pr040	Position instruction exponential smoothing filtering time	0～10000	0	0.1ms	P

2. Instruction pulse transmission path

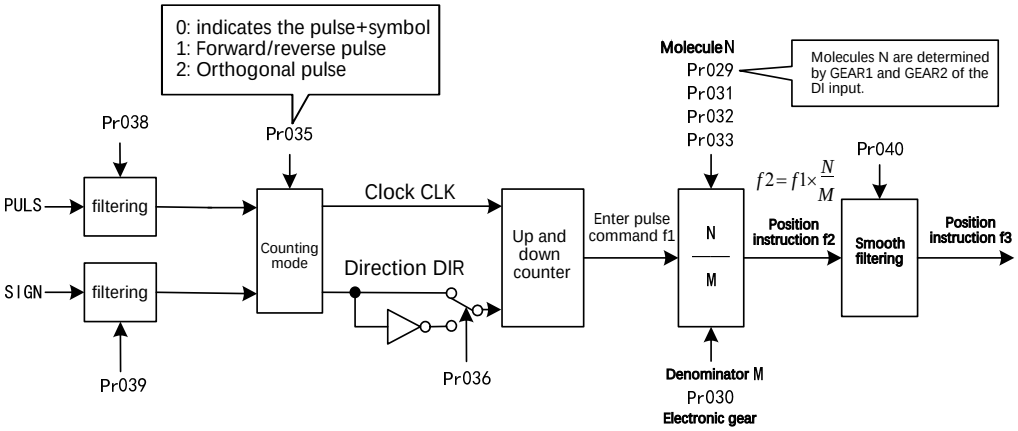

3. Instruction pulse input mode

The input mode is determined by parameter Pr035. The parameter Pr036 is used to change the counting direction and is set to 1.

Pulse instruction form	Forward rotation (CCW)	Reversal (CW)	Parameter Pr035
Pulse + direction	PULS SIGN		0
Forward/reverse pulse	PULS SIGN		1
Orthogonal pulse	PULS SIGN		2

Note: Arrow indicates counting edge, Pr036=0

4. Smooth filtering

As shown in the figure below, parameter Pr040 is a smooth filtering of the instruction pulse, with exponential acceleration and deceleration. The filter does not lose the input pulse, but there is an instruction delay. When set to 0, the filter does not work. The parameter value represents the time to rise from 0 frequency to 63.2% of the position instruction frequency.

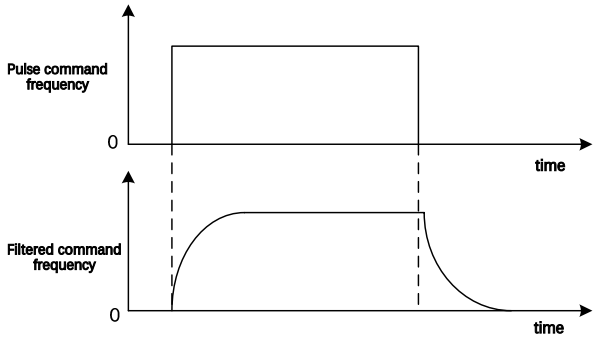

The filter smooths the input pulse frequency. This filter can be used in: the upper controller has no acceleration and deceleration function, the electronic gear is relatively large, and the command frequency is low.

4.2.3 Input electronic gear

(1) Basic description of electronic gear ratio

Through the electronic gear, the unit pulse command input to the device can be defined to make the transmission device move any distance. The pulse command generated by the upper controller does not need to consider the gear ratio of the transmission system, the reduction ratio or the number of motor encoder lines. The following table is a description of the electronic gear variables:

variable	Variable declaration	Intrinsic value
C	Number of encoder lines/bits	2500line
P_t	By default (electronic gear ratio 1: 1) The number of pulses required by the encoder for one revolution (pulse/rev)	=4×*C* =4×2500 =10000(pulse/rev)
R	Reduction ratio	R=B/A, where A: The number of motor rotation cycles; B: Number of rotation turns of load shaft
ΔP	The amount of movement of an instruction pulse	
P_c	The number of instruction pulses per revolution of the load shaft	
Pitch	Ball screw pitch (mm)	
D	Roller diameter (mm)	

Calculation formula:

$$\text{Electronic gear ratio } \frac{(N)}{M} = \frac{\text{Encoder one turn resolution}(P_t)}{\text{The number of instruction pulses per revolution of the load shaft}(P_c) \times \text{Reduction ratio}(R)}$$

among，

$$\text{The number of instruction pulses per revolution of the load shaft}(P_c) = \frac{\text{The amount of movement of the load shaft in one revolution}}{\text{The amount of movement of an instruction pulse } (\Delta P)}$$

The above calculation results are divided, and the numerator and denominator are less than or equal to the integer value of 32767, written into the parameter.

(2) Electronic gear ratio dynamic switching function

The driver provides four sets of electronic gear molecules N, which can be changed online, as determined by GEAR1 and GEAR2 of the DI input. The denominator M(parameter Pr030) is the same. The parameter Pr034 can be used to set the dynamic electronic gear application mode, as described below:
Pr034 set to 0: The dynamic electronic gear ratio switch is prohibited, and the command pulse electronic gear molecule is set by Pr029;
Pr034 set to 1: allows switching using the dynamic electronic gear ratio, and the command pulse electronic gear molecule is determined by the DI input GEAR1;

DI signal[attention] GEAR1	Command pulse electronic gear molecule N
0	First molecule (parameter Pr029)
1	Second molecule (parameter Pr031)

Attention：0 expression OFF，1 expression ON。

Pr034 Set to 2: Allows switching using the dynamic electronic gear ratio, and the command pulse electronic gear molecule is determined by GEAR1 and GEAR2 of the DI input.

DI signal [attention]		Command pulse electron gear molecule N
GEAR2	GEAR1	
0	0	First molecule (parameter Pr029)
0	1	Second molecule(parameter Pr031)
1	0	3rd molecule (parameter Pr032)
1	1	4th molecule (parameter Pr033)

Attention：0 expression OFF，1 expression ON。

4.2.4 Position control about gain

Argument	Name	Parameter range	Default value	Unit	Apply
Pr009	Position loop gain	1～1000	40	1/s	P
Pr021	Position loop feedforward gain	0～100	0	%	P
Pr022	Position loop feedforward filtering time constant	0.20～50.00	1.00	ms	P

Because the position ring includes the speed ring, according to the order of the first inner ring and then the outer ring, first set the load moment of inertia ratio, then adjust the speed ring gain, the speed ring integral time constant, and finally adjust the position ring gain.

The following is the position controller of the system. Increasing the position loop gain K_p increases the position loop bandwidth, but is limited by the speed loop bandwidth.To increase the position loop gain, the speed loop bandwidth must be increased first.

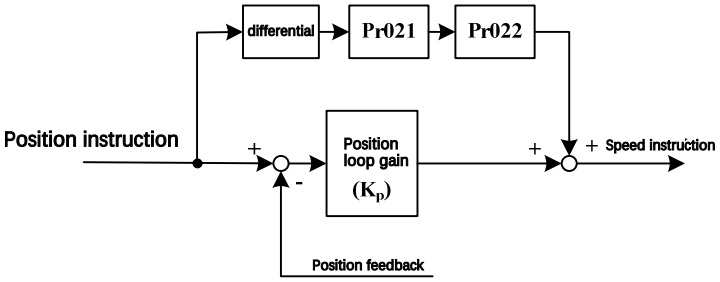

Feedforward can reduce the phase lag of position loop control, reduce the position tracking error and shorten the positioning time. The tracking error of position control decreases with the increase of feedforward amount, but the system becomes unstable and overshoot when the amount is too large. If the electronic gear ratio is greater than 10, it is also easy to produce noise. For general applications, Pr021 can be set to 0%, and when high response and low tracking error are required, it can be appropriately increased, not exceeding 80%, and it may be necessary to adjust the position loop feedforward filtering time constant (parameter Pr022).

4.3 Speed control

Speed control is used in situations where precise speed control is required, such as braiding machines , drilling machines, CNC machining machines. The position closed-loop control can also be formed by cooperating with the upper device.

4.3.1 Simple example of speed control

This manual gives a simple example of speed control (simulating speed command input), the diagram below is:

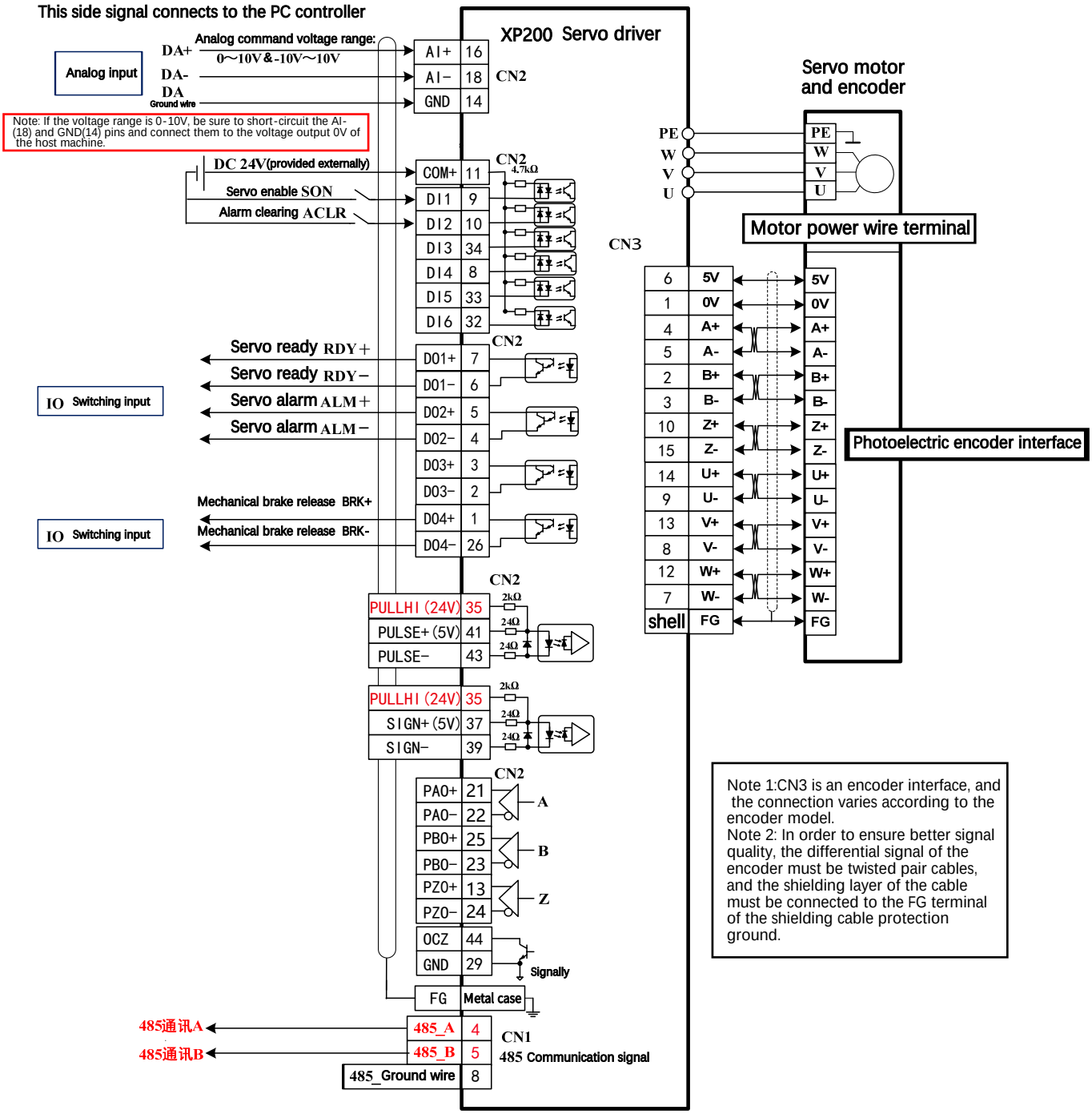

Note: The factory Settings of DIx/DOx are low and can be modified to high. The DIx/DOx functions can be redefined as required. Parameters P100 to P107 are used to configure DIx functions and high and low levels, and parameters P108 to P113 are used to configure DOx functions and high and low levels.

In this example, the parameters are set as follows: **(Use the factory defaults for other parameters.)**

Argument	name	Set value	Default value	Parameter description
Pr004	Control mode	1	0	Set to speed control mode
Pr025	Speed instruction source	0	0	Set as analog input
Pr060	Speed command acceleration time	Set as needed	100	Zero speed to 1000r/min acceleration time (ms)
Pr061	Speed command deceleration time	Set as needed	100	1000r/min to zero speed deceleration time (ms)
Pr097	Ignore drive disable	30 (Use driver prohibited)	33 (Ignore drive disable)	Use forward Drive Disable (CCWL) and Reverse Drive Disable (CWL). If it is set to ignore, the CCWL and CWL are not connected. For details, see Section 4.6.
Pr 104	Digital input DI5 function	7	20	DI5 is set to zero speed clamp ZCLAMP
Pr 110	Digital output DO3 function	6	5	DO3 is set to speed to ASP

4.3.2 Parameters related to speed instruction

The parameters related to the speed instruction are as follows:

Argument	Name	Parameter range	Default value	Unit	Apply
Pr025	Speed instruction source	0～3	0		S
Pr046	Analog speed command gain	10～3000	300	r/min/V	S
Pr047	Analog speed instruction zero bias compensation	-15000～15000	0	0.1mv	S
Pr048	Analog speed instruction direction	0～1	0		S
Pr049	Analog speed instruction filter time constant	2～500	20	0.1ms	S
Pr050	Analog speed command polarity	0～2	0		S
Pr051	Analog speed instruction dead zone 1	0～13000	0	mv	S
Pr052	Analog speed instruction dead zone 2	-13000～0	0	mv	S

The operation method of analog zero adjustment is described in Section 3.6.2. You can also manually set parameter Pr047 according to the input analog to adjust the zero offset value. The analog voltage received by the driver can be viewed through the following menu items:

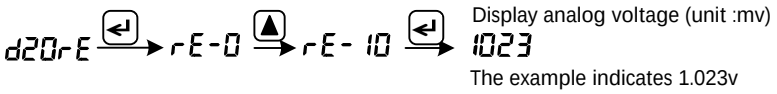

4.3.3 Speed instruction source

There are several different sources of speed instructions, set by the parameter Pr025, which are described below：

Pr025	Instructions	Explain
0	Analog speed instruction	Ports AS+ and AS- input analog voltage
1	Internal multisegment speed instruction <8 optional Pr137~Pr144>	It is determined by the SP1, SP2, and SP 3 entered by DI [Note 1].
2	Analog speed instruction + internal multi-segment speed instruction	When SP1, SP2, and SP3 are all OFF, it is the analog instruction, and the rest is determined by SP1, SP2, and SP3 [Note 2].

Note 1: Internal speed instructions:

DI signal			Speed instruction
SP3	SP2	SP1	
0	0	0	Internal velocity 1(parameter Pr137)
0	0	1	Internal Speed 2(parameter Pr138)
0	1	0	Internal Speed 3(parameter Pr139)
0	1	1	Internal Speed 4(parameter Pr140)
1	0	0	Internal Speed 5(parameter Pr141)
1	0	1	Internal speed 6(parameter Pr142)
1	1	0	Internal speed 7(parameter Pr143)
1	1	1	Internal Speed 8(parameter Pr144)

Note 2: Analog speed instruction + internal speed instruction:

DI signal			Speed instruction
SP3	SP2	SP1	
0	0	0	Analog speed instruction
0	0	1	Internal Speed 2(parameter Pr138)
0	1	0	Internal Speed 3(parameter Pr139)
0	1	1	Internal Speed 4(parameter Pr140)
1	0	0	Internal Speed 5(parameter Pr141)
1	0	1	Internal speed 6(parameter Pr142)
1	1	0	Internal speed 7(parameter Pr143)
1	1	1	Internal Speed 8(parameter Pr144)

0 indicates OFF and 1 indicates ON. There are two DI inputs that can provide special functions: CZERO(zero instruction), CINV(instruction take the reverse), when CZERO is ON, the speed instruction is forced to zero; When CINV is ON, the speed instruction is reversed.

4.3.4 Acceleration and deceleration control

Acceleration and deceleration control is related to the following parameters:

Argument	Name	Parameter range	Default value	Unit	Apply
Pr060	Speed command acceleration time	0～30000	100	ms	S
Pr061	Speed command deceleration time	0～30000	100	ms	S

Acceleration and deceleration control can slow down the sudden change of speed and make the motor run smoothly. As shown in the figure below, parameter Pr060 sets the acceleration time of the motor from zero speed to 1000r/min, and Pr061 sets the deceleration time of the motor from 1000r/min to zero speed. If the driver and the upper device constitute position control, this parameter should be set to 0.

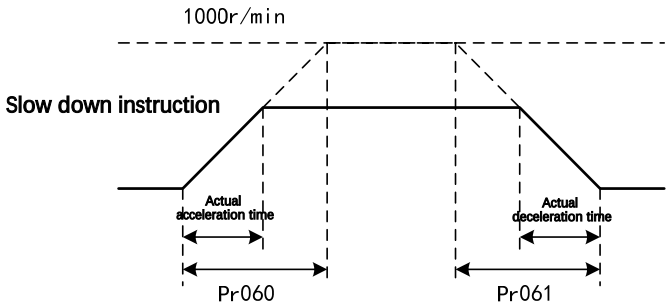

4.3.5 Zero speed clamp

The parameters related to zero-speed clamping are as follows:

Argument	Name	Parameter range	Default value	Unit	Apply
Pr 160	Zero speed detection point	0～1000	10	r/min	ALL
Pr 161	Zero speed detection error	0～1000	5	r/min	ALL
Pr 162	Zero speed clamp mode	0～1	0		S

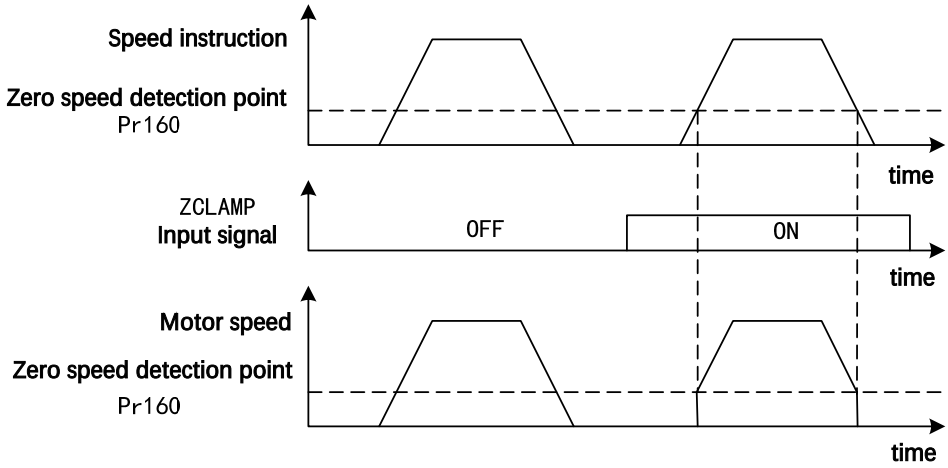

When the speed is controlled, even if the motor is at zero speed, the external force may rotate and cause the position to change. If it is an analog speed instruction input, absolute zero speed instruction is not easy to achieve, in order to solve these two problems, you can consider using zero speed clamp function. The zero-speed clamp function is turned on when the following conditions are met:

Condition 1: Speed control mode;

Condition 2: ZCLAMP(zero-speed clamp)ON DI;

Condition 3: Speed instruction is lower than parameter Pr160.

If any of the above conditions are not met, normal speed control is performed. There are two modes of zero-speed clamping:

Pr162	Description
0	The motor position is fixed at the moment the function is turned on. At this time, the internal access position control, even if due to external rotation, will return to the zero fixed point.
1	The speed command is set to zero when the function is enabled. The interior is still speed control, and it may be rotated by external forces.

4.3.6 Speed control is about gain

Argument	Name	Parameter range	Default value	Unit	Apply
Pr005	First speed loop gain	1～3000	40	Hz	P,S
Pr006	The first velocity loop integral time constant	1.0～1000.0	20.0	ms	P,S

The following is the speed controller of the system. Increasing the speed loop gain K_v can improve the response bandwidth of the speed and reduce the integral time constant T_i, which can increase the rigidity of the system and reduce the steady-state error.

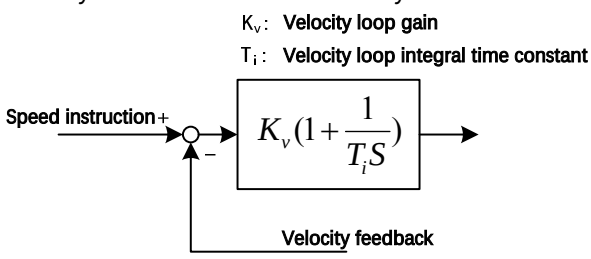

4.4 Torque control

Torque control is used in printing press, winding machine, injection molding machine and other occasions, the output torque of the motor is proportional to the input instruction.

4.4.1 Simple example of torque control

This manual gives a simple example of torque control (simulating torque instruction input). Here is the wiring diagram:

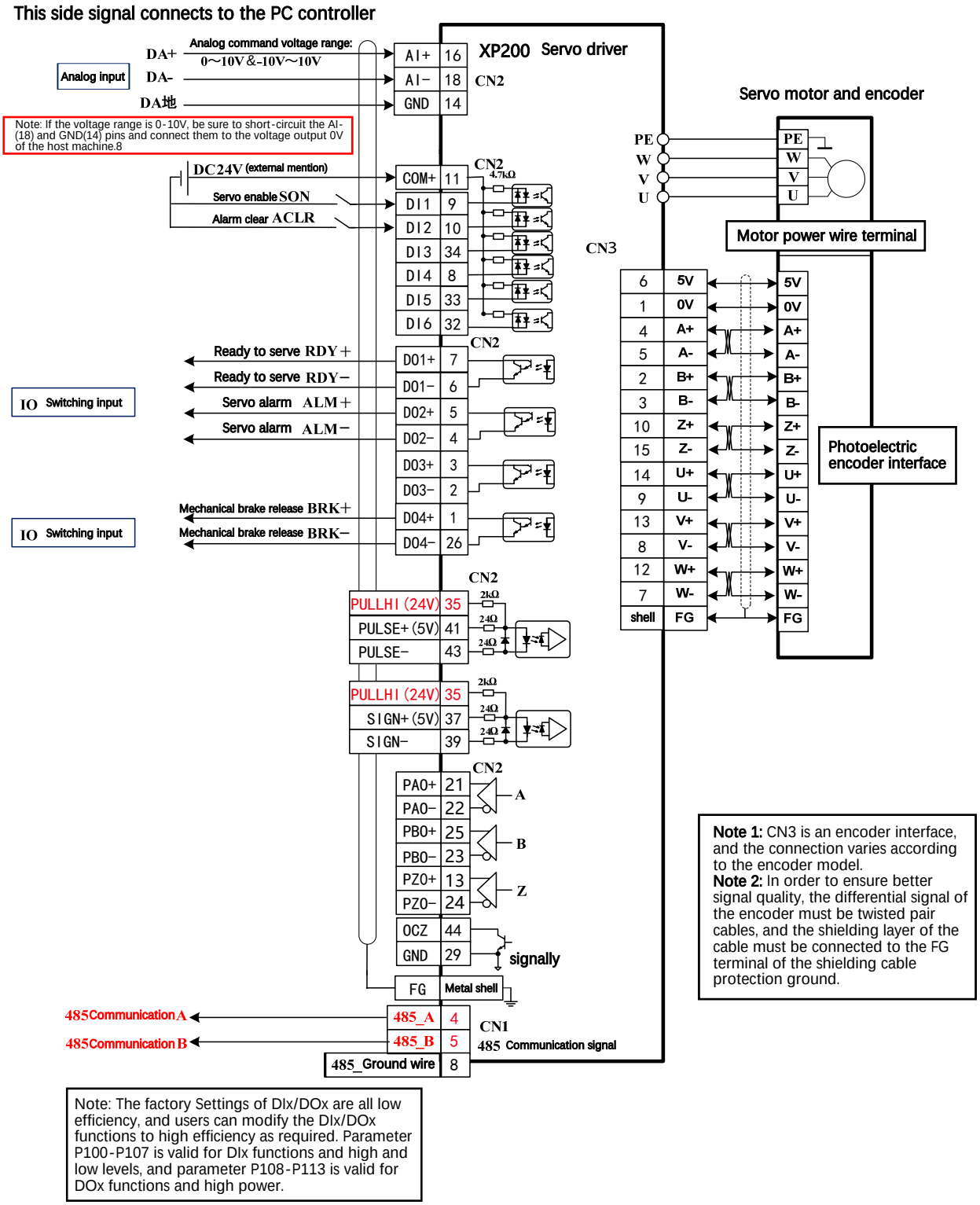

In this example, the parameters are set as follows: (Use the factory defaults for other parameters.)

Argument	name	Set value	Default value	Parameter description
Pr004	Control mode	2	0	Set to torque control
Pr026	Torque instruction source	0	0	Set as analog input
Pr097	Ignore drive disable	30	33	Use forward Drive Disable (CCWL) and Reverse Drive Disable (CWL). If it is set to ignore, the CCWL and CWL are not connected. For details, see Section 4.6.
Pr104	Digital input DI5 function	5	20	DI5 is set to positive torque limit TCCW
Pr105	Digital input DI6 function	6	21	DI6 is set to reverse torque limit TCW
Pr110	Digital output DO3 function	6	5	DO3 is set to speed to ASP

4.4.2 Torque instruction related parameters

The parameters related to the torque instruction are shown in the following table:

Argument	Name	Parameter range	Default value	Unit	Apply
Pr026	Torque instruction source	0～2	0		T
Pr053	Simulated torque command gain	1～300	30	%/V	T
Pr054	Analog torque instruction zero bias compensation	-1500.0～1500.0	0.0	mv	T
Pr055	Simulate torque instruction direction	0～1	0		T
Pr056	Analog torque instruction filtering time constant	20～500	20	0.1ms	T
Pr057	Simulates torque command polarity	0～2	0		T
Pr075	Maximum speed limit	0～6000	3500	r/min	ALL

The operation method of analog zero adjustment is described in Section 3.6.2. You can also manually set parameter Pr054 according to the input analog to adjust the zero offset value. The analog voltage received by the driver can be viewed through the following menu items:

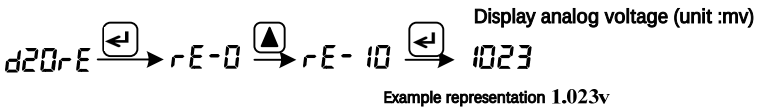

4.4.3 Torque instruction source

There are several different sources of torque instructions, set by parameter Pr026 as follows:

Pr026	Instructions	explain
0	Analog torque instruction	Ports AS+ and AS- input analog voltage
1	Internal torque instruction	It is determined by TRQ1 and TRQ2 of DI input [Note 1]
2	Analog torque instruction + internal torque instruction	When TRQ1 and TRQ2 are both OFF, it is an analog instruction, and the rest is determined by TRQ1 and TRQ2 [Note 2].

Note 1: Internal torque instruction:

DI signal		Torque instruction
TRQ2	TRQ1	
0	0	Internal torque 1(parameter Pr145)
0	1	Internal torque 2(parameter Pr146)
1	0	Internal torque 3(parameter Pr147)
1	1	Internal torque 4(parameter Pr148)

Note 2: Analog torque instruction + internal torque instruction:

DI signal		Torque instruction
TRQ2	TRQ1	
0	0	Analog torque instruction
0	1	Internal torque 2(parameter Pr146)
1	0	Internal torque 3(parameter Pr147)
1	1	Internal torque 4(parameter Pr148)

0 indicates OFF and 1 indicates ON. There are two DI inputs CZERO(zero instruction), CINV(instruction inversion) can provide special functions, when CZERO is ON, torque is forced to zero; When CINV is ON, the torque instruction is reversed.

4.5 Gain adjustment

The driver includes three control loops: current control loop, speed control loop and position control loop. The control block diagram is as follows:

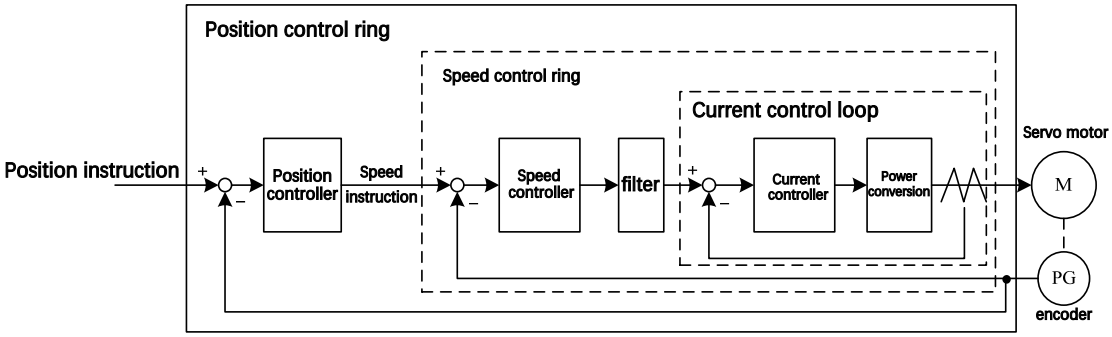

In theory, the inner control loop bandwidth must be higher than the outer layer, otherwise the entire control system will be unstable and cause vibration or poor response, so the relationship between the three control loop bandwidth is as follows:

Current loop bandwidth > speed loop bandwidth > position loop bandwidth

Since the driver has already adjusted the current control ring for optimal condition, the user only needs to adjust the speed control ring and position control ring parameters.

4.5.1 Gain parameter

The parameters related to the control gain are as follows:

Argument	name	Parameter range	Default value	Unit	Apply
Pr005	Velocity loop gain	1～3000	50	Hz	P,S
Pr006	Velocity loop integral time constant	1～1000	20	ms	P,S
Pr009	Position loop gain	1～1000	40	1/s	P
Pr007	Torque filtering time constant	1～500	25	0.1ms	ALL
Pr019	Velocity detection filter time constant	5～500	25	0.1ms	P,S

Symbols are defined as follows:

K_v: Velocity loop gain;

T_i: Velocity loop integral time constant;

K_p: Position loop gain;

G: Load moment of inertia ratio;

J_L: Convert the load moment of inertia to the motor shaft;

J_M: Motor rotor moment of inertia.

1. Velocity loop gain K_v

The speed loop gain Kv directly determines the response bandwidth of the speed loop. Under the premise that the mechanical system does not produce vibration or noise, increasing the speed loop gain value will accelerate the speed response and the better the following speed command. However, too large a setting is prone to mechanical resonance. The speed loop bandwidth is expressed as:

$$\text{Speed loop bandwidth } (Hz) = \frac{1+G}{1+J_L/J_M} \times K_v(Hz)$$

If the load moment of inertia ratio G is set correctly (G=JL/JM), then the speed loop bandwidth is equal to the speed loop gain K_v.

2. Velocity loop integral time constant T_i

The velocity loop integral can effectively eliminate the steady-state error of the velocity and quickly respond to the subtle velocity change. On the premise that the mechanical system does not produce vibration or noise, the time constant of the velocity loop integral T_i is reduced,To increase the rigidity of the system and reduce the steady-state error. If the l oad inertia ratio is large or there is a resonance factor in the mechanical system, it must be c onfirmed.

The speed loop integral time constant is large enough, otherwise the mechanical system is prone to resonance. If the load moment of inertia ratio G is set correctly($G=J_L/J_M$), The velocity loop integral time constant is obtained by the following formula T_i:

$$T_i(ms) \geq \frac{4000}{2\pi \times K_V(Hz)}$$

3. Position loop gain K_p

The gain of the position loop directly determines the reaction speed of the position loop. Under the premise that the mechanical system does not produce vibration or noise, the gain value of the position loop is increased to speed up the reaction speed, reduce the position tracking error, and shorten the positioning time. However, too large a setting can cause the mechanical system to jitter or positioning overshoot. The position loop bandwidth cannot be higher than the speed loop bandwidth, generally

$$\text{Position loop bandwidth } (Hz) \leq \frac{\text{Speed loop bandwidth } (\text{Hz})}{4}$$

If the load moment of inertia ratio G is set correctly($G=J_L/J_M$),the position loop gain K_p is calculated as follows:

$$K_p(1/s) \leq 2\pi \times \frac{K_v(Hz)}{4}$$

4.5.2 Gain adjustment procedure

The choice of location and speed bandwidth must be determined by the rigidity of the machine and the application, and the conveyor machinery connected by the belt has low rigidity and can be set to a lower frequency width; The mechanical stiffness of the ball screw driven by the reducer is medium and can be set to medium bandwidth; Direct drive ball screw or linear motor with high stiffness can be set to high frequency width. If the mechanical properties are unknown, the gain can be gradually increased to increase the bandwidth until resonance, and then reduced. In servo gain, if one parameter is changed, the other parameters also need to be readjusted. Do not make large changes to just one parameter. Regarding the changing steps of servo parameters, generally follow the following principles:

Increase response	Reduces response, suppresses vibration and overshoot
1. Increase the speed loop gain K_v (Pr005) 2. Reduce the velocity loop integral time constant T_i(Pr006) 3. Increase the gain of the position loop K_p(Pr009)	1.Reduced position loop gain K_p(Pr009) 2.Increase the velocity loop integral time constant T_i(Pr006) 3.Reduced speed loop gain K_v (Pr005)

Gain adjustment steps for speed control

1. Set the load moment of inertia ratio (the driver is automatically adapted according to the motor model).
2. Set the speed loop integral time constant (Pr006) to a larger value.
3. The speed loop gain (Pr005) is turned up within the range of no vibration and abnormal sound, and slightly turned down if vibration occurs.
4. The speed loop integral time constant is reduced within the range without vibration, and slightly increased if vibration occurs.

5. If the gain cannot be increased due to resonance of the mechanical system and other reasons, and the desired response cannot be obtained, adjust the suppressed resonance of the torque low-pass filter (Pr007) or the speed detection filter (Pr019), and then re-perform the above steps to improve the response.

Gain adjustment steps for position control

1. Set the load moment of inertia ratio (the driver is automatically adapted according to the motor model).
2. Set the speed loop integral time constant (Pr006) to a larger value.
3. The speed loop gain (Pr005) is turned up within the range of no vibration and abnormal sound, and slightly turned down if vibration occurs.
4. The speed loop integral time constant is reduced within the range without vibration, and slightly increased if vibration occurs.
5. Increase the gain of the position loop (Pr009), and reduce it slightly if vibration occurs.
6. If the gain cannot be increased due to resonance of the mechanical system and other reasons, and the desired response cannot be obtained, adjust the suppressed resonance of the torque low-pass filter (Pr007) or the speed detection filter (Pr019), and then re-perform the above steps to improve the response.
7. If shorter positioning time and smaller position tracking error are required, position feedforward (Pr021, Pr022) can be adjusted appropriately.

4.6 Overrange protection

The over-range protection function refers to the safety function that when the moving part of the machine exceeds the safe moving range of the design, the limit switch acts to force the motor to stop. The over-range protection diagram is as follows:

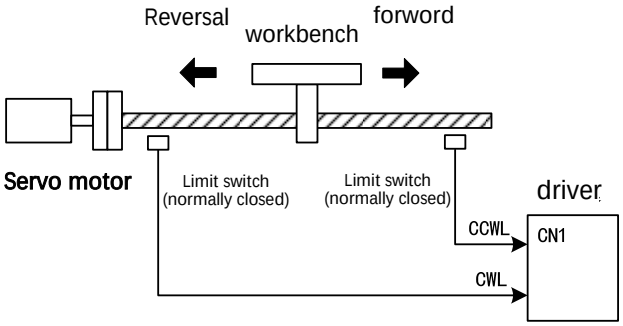

The limit switch is recommended to use a normally closed contact, which is closed in the safe range and disconnected in the overrange. The connection to Forward Drive Disable (CCWL) and Reverse Drive Disable (CWL) can also be set to Use and ignore via parameter Pr097. Set to use, the limit signal must be connected; If Ignore is set, the signal is not required. By default, both CCWL and CWL are ignored. To use this parameter, you must modify Pr097. Even in the overrange state, it is still allowed to exit the overrange state by entering a reverse instruction.

Pr097	Reverse drive disable (CWL)	Forward drive prohibited (CCWL)
0	Use	Use
1	Use	ignore
2	ignore	Use
3(default)	ignore	ignore

4.7 Working sequence

4.7.1 Power on sequence

After the main power is connected, the delay is about 1.5 seconds, the servo is ready to signal (SRDY)ON, at this time, the servo enable (SON) signal can be accepted, and the servo enable is detected to be effective, the power circuit is on, the motor is excited, and it is in the running state. The servo is detected to be invalid or there is an alarm, the power circuit is closed, and the motor is in the free state.

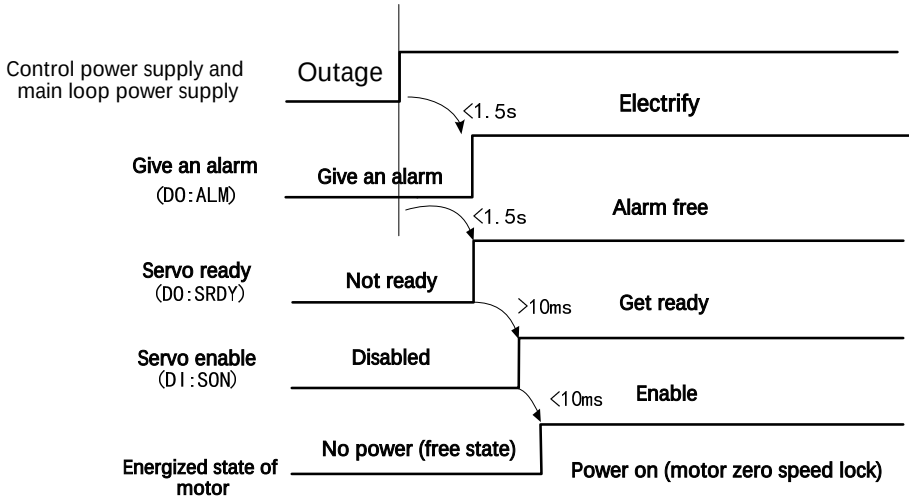

4.7.2 Alarm timing when servo is ON

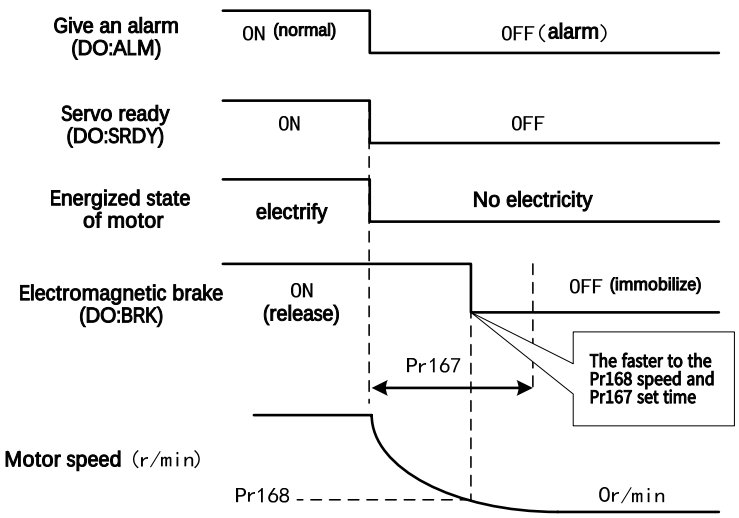

4.7.3Timing of electromagnetic brake action when the motor is stationary

When the motor speed is lower than the parameter Pr165, the electromagnetic brake action sequence:

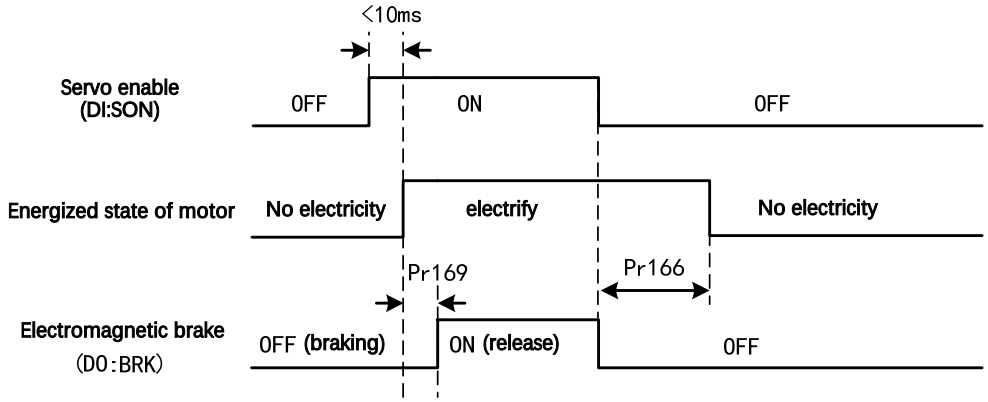

4.7.4 The electromagnetic brake action timing when the motor is running

When the motor speed is higher than the parameter Pr165, the electromagnetic brake action sequence:

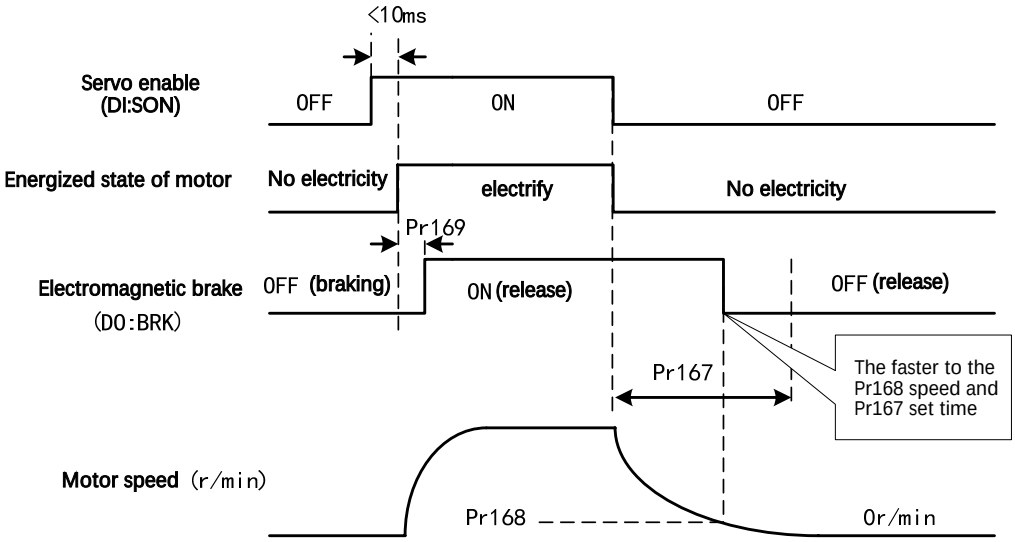

4.8 Electromagnetic brake

The electromagnetic brake (hold brake, loss brake) is used to lock the vertical or inclined table connected to the motor to prevent the table from falling when the servo power is lost. To achieve this function, you need to buy a motor with a brake. The brake can only be used to hold the table, and must not be used to slow down and stop the movement of the machine.

4.8.1 Electromagnetic brake parameter

Electromagnetic brake parameters:

Argument	name	Parameter range	Default value	Unit	Apply
Pr 165	Motor static speed detection point	0～1000	5	r/min	ALL
Pr 166	Electromagnetic brake delay time when the motor is stationary	0～2000	500	ms	ALL
Pr 167	Electromagnetic brake waiting time when the motor is running	0～2000	500	ms	ALL
Pr 168	Speed of the electromagnetic brake when the motor is running	0～3000	100	r/min	ALL
Pr 169	The delay time when the electromagnetic brake is released	0～3000	500	ms	ALL

4.8.2 Application of electromagnetic brake

The following is the brake wiring diagram. The brake release signal BRK of the driver is connected to the relay coil, and the relay contact is connected to the brake power supply. The brake power supply is provided by the user and has sufficient capacity. It is recommended to install a surge absorber to suppress the surge voltage caused by relay on/off action. Diode surge absorber can also be used, it should be noted that it will cause a little braking delay. After the motor is stopped and stationary (the speed is less than Pr165), the servo is OFF, then the motor continues to be energized to maintain the position, the brake is released from the brake, and after a period of stability (the time is determined by the parameter Pr166), the motor power is removed. When the motor is in operation (speed greater than Pr165), the servo OFF, then the motor current is cut off, the brake continues to release state, delay for a period of time, the brake brake. This is to slow down the motor from a high-speed rotation state to a low speed, and then make the mechanical brake action to avoid damage to the brake. The delay time is the time required for parameter Pr167 or motor speed to decelerate to the speed of parameter Pr168, whichever is the least of the two. Pr169: Defines the delay time between motor current ON and electromagnetic brake release (DO output terminal BRK ON) when the system changes from disabled to enabled.

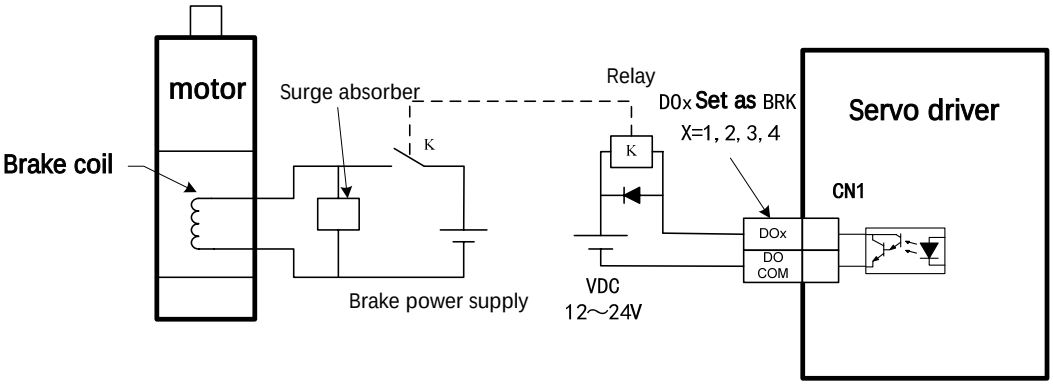

Chapter 5 Parameters

5.1 Parameter list

The applicable field indicates the applicable control mode, P for position control, S for speed control, T for torque control, and All for position, speed, and torque control. If the parameter value is *, the factory default value may be different.

5.1.1 Segment 0 parameter

Argument	name	Parameter range	Default value	Unit	Apply
Pr000	Operating code	0～9999	315		ALL
Pr001	Driver type code	*	*		ALL
Pr002	Motor code	*	*		ALL
Pr003	Software version	*	*		ALL
Pr004	Control mode	0～8	0		ALL
Pr005	First speed loop gain	1～3000	50	Hz	P,S
Pr006	The first velocity loop integral time constant	1～1000	20	ms	P,S
Pr007	The first torque filtering time constant	1～500	25	0.1ms	ALL
Pr009	First position loop gain	1～1000	40	1/s	P
Pr019	Velocity detection filter time constant	5～500	35	0.1ms	P,S
Pr021	Position loop feedforward gain	0～100	0	%	P
Pr022	Position loop feedforward filtering time constant	2～500	10	0.1ms	P
Pr025	Speed instruction source	0～3	0		S
Pr026	Transposition refers to the present source	0～2	0		T
Pr029	Position command pulse electronic gear first molecule	1～32767	1		P
Pr030	Position command pulse electronic gear denominator	1～32767	1		P
Pr031	Command pulse electronic gear 2nd molecule	1～32767	1		P
Pr032	Command pulse electronic gear 3rd molecule	1～32767	1		P
Pr033	Command pulse electronic gear 4th molecule	1～32767	1		P
Pr035	Position instruction pulse input mode	0～2	0		P
Pr036	Position instruction pulse input direction	0～1	0		P
Pr037	Position instruction pulse input signal logic	0～3	0		P
Pr038	Position instruction pulse signal filtering coefficient	0～15	6		P
Pr039	Position instruction direction signal filtering coefficient	0～3	0		P
Pr040	Position instruction exponential smoothing filtering time	0～5000	0	1ms	P
Pr046	Analog speed command gain	10～3000	300	r/min/V	S
Pr047	Analog speed instruction zero bias compensation	-15000～15000	0	0.1mv	S
Pr048	Analog speed instruction direction	0～1	0		S
Pr049	Analog speed instruction filter time constant	2～500	20	0.1ms	S
Pr050	Analog speed command polarity	0～2	0		S
Pr051	Analog speed instruction dead zone 1	0～13000	0	mv	S
Pr052	Analog speed instruction dead zone 2	-13000～0	0	mv	S
Pr053	Simulated torque command gain	1～300	30	%/V	T
Pr054	Analog torque instruction zero bias compensation	1500～1500	0	mv	T

Argument	name	Parameter range	Default value	Unit	Apply
Pr055	Simulate torque instruction direction	0～1	0		T
Pr056	Analog torque instruction filtering time constant	2～500	20	0.1ms	T
Pr057	Simulates torque command polarity	0～2	0		T
Pr060	Speed command acceleration time	0～10000	100	ms	S
Pr061	Speed command deceleration time	0～10000	100	ms	S
Pr063	EMG(Emergency Shutdown)/ALM Deceleration time	0～10000	1000	ms	ALL
Pr064	Torque limit option	0～2	0		ALL
Pr065	Internal forward turning (CCW) torque limit	0～300	300	%	ALL
Pr066	Internal inversion (CW) torque limit	-300～0	-300	%	ALL
Pr067	External forward turning (CCw) torque limit	0～300	100	%	ALL
Pr068	External reversal (CW) torque limit	-300～0	-100	%	ALL
Pr069	Test run torque limit	0～300	100	%	ALL
Pr070	Positive torque (CW) overload alarm level	1～300	140	%	ALL
Pr071	Reverse (CW) torque overload alarm level	-300～-1	-140	%	ALL
Pr072	Torque overload alarm detection time	1～30000	5000	ms	ALL
Pr075	Maximum speed limit	0～6000	3500	r/min	ALL
Pr076	JOG running speed	0～5000	100	r/min	S
Pr077	Speed limit selection	0～2	0		T
Pr078	Torque control when speed limit	0～5000	1000	r/min	T
Pr079	Speed limit error in torque control	1～5000	100	r/min	T
Pr080	Position out-of-tolerance detection	0～32767	400	0.01circle	P
Pr081	First encoder type selection	0~1	0		ALL
Pr082	Control the number of encoder lines	1~32767	2500	pulse	ALL
Pr083	First encoder zero offset Angle	-3600~3600	-230	0.1°C	ALL
Pr084	First encoder control parameter	0～11111	0		ALL
Pr097	Positive and negative limit usage mode/forward and reverse control	0～33	33		ALL
Pr098	Force enable	0~1	0		ALL
Pr099	Motor series code	0~15	0		ALL

5.1.2 1-stage parameter

Argument	name	Parameter range	Default value	Unit	Apply
Pr100	Digital input DI1 function	-21～21	1		ALL
Pr101	Digital input DI2 function	-21～21	2		ALL
Pr102	Digital input DI3 function	-21～21	3		ALL
Pr103	Digital input DI4 function	-21～21	4		ALL
Pr104	Digital input DI5 function	-21～21	20		ALL
Pr105	Digital input DI6 function	-21～21	21		ALL
Pr108	Digital output DO1 function	-12～12	2		ALL
Pr109	Digital output DO2 function	-12～12	3		ALL
Pr110	Digital output DO3 function	-12～12	5		ALL
Pr111	Digital output DO4 function	-12～12	8		ALL
Pr120	Digit input DI Mandatory valid 1	00000～11111	00000		ALL

Argument	name	Parameter range	Default value	Unit	Apply
Pr121	Digit input DI Mandatory valid 2	00000～11111	00000		ALL
Pr122	Digit input DI Mandatory valid 3	00000～11111	00000		ALL
Pr123	Digit input DI Mandatory valid 4	00000～11111	00000		ALL
Pr124	Digit input DI Mandatory valid 5	00000～11111	00000		ALL
Pr125	Digital input DIx filtering	1～1000	5	ms	ALL
Pr136	Enable off or stop mode when alarm occurs	0～1	0		ALL
Pr137	Internal velocity 1	-5000～5000	0	r/min	S
Pr138	Internal velocity 2	-5000～5000	0	r/min	S
Pr139	Internal velocity 3	-5000～5000	0	r/min	S
Pr140	Internal speed 4	-5000～5000	0	r/min	S
Pr141	Internal speed 5	-5000～5000	0	r/min	S
Pr142	Internal speed 6	-5000～5000	0	r/min	S
Pr143	Internal speed 7	-5000～5000	0	r/min	S
Pr144	Internal speed 8	-5000～5000	0	r/min	S
Pr145	Internal torque 1	-300～300	0	%	T
Pr146	Internal torque 2	-300～300	0	%	T
Pr147	Internal torque 3	-300～300	0	%	T
Pr148	Internal torque 4	-300～300	0	%	T
Pr150	Location completion range	0～32767	10	pulse	P
Pr151	Positioning complete return difference	0～32767	5	pulse	P
Pr152	Location approach range	0～32767	500	pulse	P
Pr153	Positioning approach back difference	0～32767	50	pulse	P
Pr154	Arrival speed	-5000～5000	500	r/min	ALL
Pr155	Arrival velocity return difference	0～5000	30	r/min	ALL
Pr156	Arrival velocity polarity	0～1	0		ALL
Pr157	Arrival torque	-300～300	100	%	ALL
Pr158	Arrival torque return difference	0～300	5	%	ALL
Pr159	Reach the shift polarity	0～1	0		ALL
Pr160	Zero speed detection point	0～1000	10	r/min	ALL
Pr161	Zero speed detection error	0～1000	5	r/min	ALL
Pr162	Zero speed registration mode	0～1	0		S
Pr164	Emergency shutdown mode	0～1	0		P
Pr165	Motor static speed detection point	0～1000	5	r/min	ALL
Pr166	Electromagnetic brake delay time when the motor is stationary	0～5000	500	ms	ALL
Pr167	Electromagnetic brake waiting time when the motor is running	0～5000	500	ms	ALL
Pr168	Speed of the electromagnetic brake when the motor is running	0～3000	100	r/min	ALL
Pr169	The delay time for the electromagnetic brake to open	0～5000	500	ms	ALL

5.1.32 Segment Parameters (Partial)

Argument	name	Parameter range	Default value	Unit	Apply
Pr201	Number of motor poles	1～50	4		ALL
Pr204		1～4000	60	0.1A	ALL
Pr207		1～30000	2500	r/min	ALL

5.2 DI function list

Serial number	symbol	DI Feature	Serial number	symbol	DI Feature
0	NULL	non-function	14	TRQ2	Internal torque option 2
1	SON	Servo enable	15	EMG	Emergency shutdown
2	ACLR	Alarm clearing	16	CMODE	Control mode switching
3	CCWL	Forward drive prohibited	17	GAIN	Gain switching
4	CWL	Reverse drive disable	18	GEAR1	Electronic gear option 1
5	TCCW	Positive torque restriction	19	GEAR2	Electronic gear option 2
6	TCW	Inverse torque restriction	20	CLE	Position deviation clearance
7	ZCLAMP	Zero speed registration	21	INH	Pulse input disable
8	CZERO	Return-to-zero instruction			
9	CINV	Instruction inversion	23	CCW	Forward running
10	SP1	Internal speed option 1	24	CW	Inverted run
11	SP2	Internal speed option 2			
12	SP3	Internal speed option 3			
13	TRQ1	Internal torque option 1			

5.3 DO Function List

Serial number	symbol	DO Feature	Serial number	symbol	DO Feature
0	OFF	Have been ineffective	8	BRK	Electromagnetic brake
1	ON	Always in effect	9	RUN	Servo in operation
2	SRDY	Servo ready	10	NEAR	Location approach
3	ALM	Give an alarm	11	TRQL	Torque limit
4	ZSP	Zero speed	12	SPL	In speed limit
5	COIN	Position complete	14	PtoS	Position/Speed mode switch complete
6	ASP	Speed arrival	15	PtoT	Position/torque mode switch complete
7	ATRQ	Torque arrival	16	StoT	Speed/torque mode switch complete
			20	DO3_ZOUT	Return to zero Z signal output (only DO3 supports this feature)

5.4 Parameter detail

5.4.1 Segment 0 parameter

Pr000	Operating code	Radius	Default valu	Unit	apply
		0～9999	315		ALL

- Hierarchical management of parameters ensures that parameters are not modified by mistake.
- Some special operations require a proper password.
- P-002 motor code, P-099 motor series code, P-000 should be set to 385 (or316) when modifying, otherwise the modification is invalid

Pr001	Driver code	Radius	Default value	Unit	apply
		*	*		ALL

- The drive model currently in use. It has been set before delivery and cannot be modified by users.

Pr002	Motor code	Radius	Default value	Unit	apply
		*	*		ALL

- Set the current motor model based on the actual motor model.
- Refer to Motor adaptation Table in Section 7.2 for the meaning of parameters.
- When replacing different types of motors, you need to modify this parameter. Fordetai ls, see Section 3.7.

Pr003	Software version	Radius	Default value	Unit	apply
		*	*		ALL

- The software version number cannot be modified.

Pr004	Control mode	Radius	Default value	Unit	apply
		0～8	0		ALL

- Parameter meaning:
  0: Position control mode; 1: Speed control mode; 2: torque control mode;
  3: Position/speed mode; 4: Position/torque mode; 5: Speed/torque mode;
- When the value is set to 3, 4, or 5, the specific control mode is determined by the CMODE of DI input:

P004	CMODE [annotation]	Control mode
3	0	Position control
	1	Speed control
4	0	Position control
	1	Torque control
5	0	Speed control
	1	Torque control

Annotation：0 expression OFF，1 expression ON.

Pr005	First speed loop gain	Radius	Default value	Unit	apply
		1～3000	50	Hz	P,S

- The proportional gain of the speed regulator, increasing the parameter value, can s peed up the speed response, too large easy to cause vibration and noise.

Pr006	The first velocity loop integral time constant	Radius	Default value	Unit	apply
		1～1000	20	ms	P,S

・ The integral time constant of the speed regulator, reducing the parameter value, can reduce the speed control error, increase the rigidity, too small easy to cause vibration and noise.
・ Set to the maximum value (1000) to cancel integration, and the speed regulator is the P controller.

Pr007	The first torque filtering time constant	Radius	Default value	Unit	apply
		1～500	35	0.1ms	ALL

- A low pass torque filter that suppresses mechanically induced vibration.
- The larger the value is, the better the vibration suppression effect is. The larger the value is, the slower the response will be, which may cause oscillation. The smaller the value, the faster the response, but it is limited by mechanical conditions.
- When the load inertia is small, a smaller value can be set. When the load inertia is large, a larger value can be set.

Pr009	First position loop gain	Radius	Default value	Unit	apply
		1～1000	40	1/s	P

- Proportional gain of position regulator; Increasing the parameter value can reduce the position tracking error and improve the response, too large may lead to overshoot or oscillation.

Pr019	Velocity detection filter time constant	Radius	Default value	Unit	apply
		5～500	35	0.1ms	P,S

- The larger the parameter value, the smoother the detection, the smaller the parameter value, the faster the detection response, too small may cause noise; Too much could cause oscillations.

Pr021	Position loop feedforward gain	Radius	Default value	Unit	apply
		0～100	0	%	P

- The position tracking error during position control is reduced by feedforward. When set to 100, the position tracking error is always 0 under any frequency instruction pulse.
- If the parameter value increases, the position control response will be improved. If the parameter value is too large, the system will be unstable and prone to oscillation.

Pr022	Position loop feedforward filtering time constant	Radius	Default value	Unit	apply
		2～500	10	0.1ms	P

- The function of filtering the feedforward quantity of position loop is to increase the stability of feedforward control.

Pr025	Speed instruction source	Radius	Default value	Unit	apply
		0～5	0		S

- Speed control when setting the source of the speed instruction.

Parameter meaning:

0: analog speed 1: internal multi-segment speed <8 optional Pr137~Pr144 >
2: analog quantity + internal multi-segment speed 3: pulse speed
The specific meanings are as follows:
0: analog speed instruction, input by analog ports AS+ and AS-.
1: Internal speed instruction, determined by the SP1, SP2, SP3 input by DI:

DI Signal [Note]			Speed instruction
SP3	SP2	SP1	
0	0	0	Internal velocity 1(parameter Pr137)
0	0	1	Internal Speed 2(parameter Pr138)
0	1	0	Internal Speed 3(parameter Pr139)
0	1	1	Internal Speed 4(parameter Pr140)
1	0	0	Internal Speed 5(parameter Pr141)
1	0	1	Internal speed 6(parameter Pr142)
1	1	0	Internal speed 7(parameter Pr143)
1	1	1	Internal Speed 8(parameter Pr144)

Note：0 is OFF，1 is ON.

2：Analog speed instruction + Internal speed instruction:

DI Signal [Note]			Speed instruction
SP3	SP2	SP1	
0	0	0	Analog speed instruction
0	0	1	Internal Speed 2(parameter Pr138)
0	1	0	Internal Speed 3(parameter Pr139)
0	1	1	Internal Speed 4(parameter Pr140)
1	0	0	Internal Speed 5(parameter Pr141)
1	0	1	Internal speed 6(parameter Pr142)
1	1	0	Internal speed 7(parameter Pr143)
1	1	1	Internal Speed 8(parameter Pr144)

Note：0 is OFF，1 is ON.

Pr026	Torque instruction source	Radius	Default value	Unit	apply
		0～2	0		T

- When torque control, set the source of the torque instruction.
- Parameter meaning:

0: analog torque instruction, input by analog ports AS+ and AS-.

1: Internal torque instruction, determined by TRQ1 and TRQ2 input by DI:

DI Signal [Note]		Torque instruction
TRQ2	TRQ1	
0	0	Internal torque 1(parameter Pr145)
0	1	Internal torque 2(parameter Pr146)
1	0	Internal torque 3(parameter Pr147)
1	1	Internal torque 4(parameter Pr148)

Note：0 is OFF，1 is ON.

2: analog torque instruction + internal torque instruction;

DI Signal [Note]		Torque instruction
TRQ2	TRQ1	
0	0	Analog torque instruction
0	1	Internal torque 2(parameter Pr146)
1	0	Internal torque 3(parameter Pr147)
1	1	Internal torque 4(parameter Pr148)

Note：0 is OFF，1 is ON.

Pr029	Position command pulse electronic gear first molecule	Radius	Default value	Unit	apply
		1～32767	1		P

Pr030	Position command pulse electronic gear denominator	Radius	Default value	Unit	apply
		1～32767	1		P

- It is used to divide or double the frequency of the input pulse, and can be easily matched w ith various pulse sources to achieve the pulse resolution required by users.
- The numerator N of the command pulse electronic gear is set by parameter Pr029 and the denominator M is set by parameter Pr030.
- The input pulse instruction is changed by N/M to obtain the position instruction.

Pr031	Position command pulse electronic gear 2nd molecule	Chapter 5 Parameters	Default value	Unit	apply
		1～32767	1		P

- See the description of parameters Pr029 and Pr030.

Pr032	Position command pulse electronic gear 3rd molecule	Chapter 5 Parameters	Default value	Unit	apply
		1～32767	1		P

- See the description of parameters Pr029 and Pr030.

Pr033	Position command pulse electronic gear 4th molecule	Chapter 5 Parameters	Default value	Unit	apply
		1～32767	1		P

- See the description of parameters Pr029 and Pr030.

Pr034	Position instruction control word	Chapter 5 Parameters	Default value	Unit	apply
		0～11111	0		S

- During position control, the source of position instruction and the application mode of dynamic electronic gear are set.
- Parameter meaning:

Ten digits: Set the position instruction
0: external pulse 1: internal digital quantity
Units digit: Set the dynamic electronic gear application mode (see the instructions in section 4.2.3)
0: The use of dynamic electronic gear ratio switching is prohibited, and the command pulse electronic gear molecule is set by Pr029
1: Allows the use of dynamic electronic gear ratio switching, and the command pulse electronic gear molecule is determined by the DI input GEAR1
2: Allows the use of dynamic electronic gear ratio switching, and the command pulse electronic gear molecule is determined by the DI input GEAR1, GEAR2

Pr035	Position instruction pulse input mode	Chapter 5 Parameters	Default value	Unit	apply
		0～2	0		P

- Set the instruction pulse input mode, parameter meaning:

0: pulse + direction
1: Forward/reverse pulse
2: Orthogonal pulse

Pulse instruction form	Forward rotation (CCW)	Reversal (CW)	Parameter Pr035
Pulse + direction	PULS SIGN		0
Forward/ reverse pulse	PULS SIGN		1
Orthogonal pulse	PULS SIGN		2

Note: The arrow indicates the counting edge, and the parameter is set to Pr036=0, Pr037=0.

- Instruction pulse input block diagram

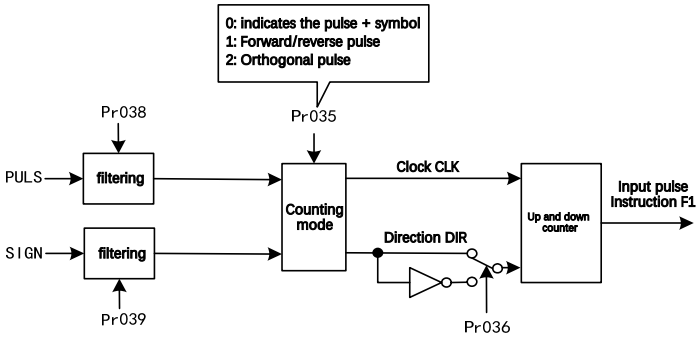

Pr036	Position instruction pulse input direction	Radius	Default value	Unit	apply
		0～1	0		P

- Parameter meaning:

0: indicates the normal direction. 1: indicates the reverse direction

Pr038	Position instruction pulse signal filtering coefficient	Radius	Default value	Unit	apply
		0～15	6		P

- The input pulse signal PULS is digitally filtered. The larger the value is, the larger the filtering time cons tant is.
- The default value is 500kHz(kpps). The larger the value, the lower the maximum input frequency.
- It is used to filter the noise on the signal line and avoid counting errors. If the phenomenon of inaccur ate walking is caused by inaccurate counting, the parameter value can be appropriately increased.
- Timing lead or lag of pulse and directional signals can be adjusted.
- After the parameters are modified, save them and power them on again.

Pr039	Position instruction direction signal filtering coefficient	Radius	Default value	Unit	apply
		0～3	0		P

- The pulse direction signal SIGN is digitally filtered. The larger the value is, the larger the filtering time constant is.
- After the parameters are modified, save them and power them on again.
- Timing lead or lag of pulse and directional signals can be adjusted.
- After the parameters are modified, save them and power them on again.

Pr040	Position instruction exponential smoothing filtering time	Radius	Default value	Unit	apply
		0～5000	0	1ms	P

- The instruction pulse is smoothly filtered and has exponential acceleration and deceleration. The filter does not lose the input pulse, but there is an instruction delay, and when set to 0, the filter does not work.
- This filter is used for:

1. The upper controller has no acceleration and deceleration function;
2. The electronic gear is relatively large (N/M>10);
3. Low command frequency;
4. When the motor is running, there is stepping jump and instability.

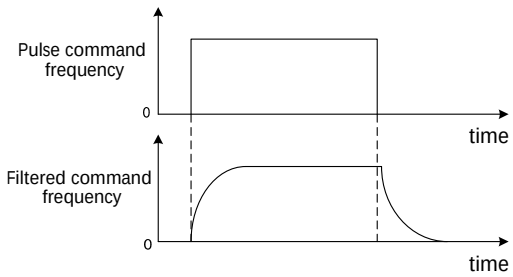

Pr046	Analog speed command gain	Radius	Default value	Unit	apply
		10～3000	300	r/min/V	S

- Set the proportional relationship between the analog speed input voltage and the actual motor speed.
- The analog input range is -10V to 10V.

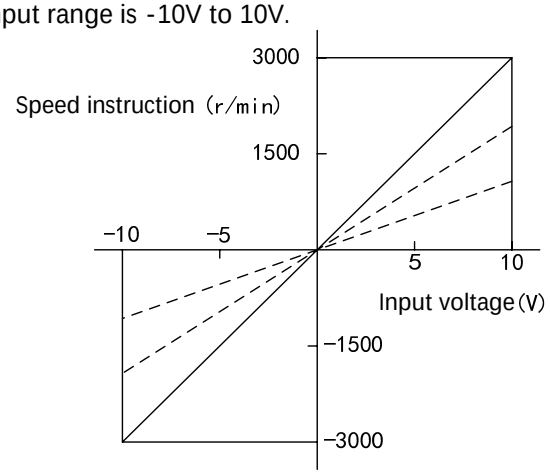

Pr047	Analog speed instruction zero bias compensation	Radius	Default value	Unit	apply
		-15000～15000	0	0.1mv	S

- Analog speed input zero offset compensation, the actual speed instruction is the input analog minus this parameter value.
- This parameter can be set automatically by using the analog automatic zero function, refer to Section 3.6.2.

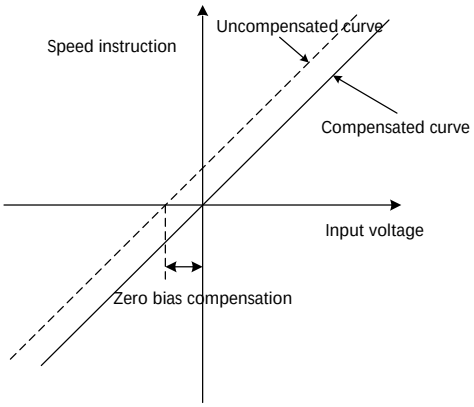

Pr048	Analog speed instruction direction	Radius	Default value	Unit	apply
		0～1	0		S

- Parameter meaning:

Pr048	Positive polarity (positive voltage) analog input	Negative polarity (negative voltage) analog input
0	Forward turn (CCW) speed command	Reverse (CW) speed instruction
1	Reverse (CW) speed instruction	Forward turn (CCW) speed command

Pr049	Analog speed instruction filter time constant	Radius	Default value	Unit	apply
		2～500	20	0.1ms	S

- Analog speed input low-pass filter.
- The larger the setting, the slower the response speed of the input analog, which is conducive to reducing the interference of high-frequency noise. The smaller the setting, the faster the response speed, but the high frequency noise interference.

Pr050	Analog speed command polarity	Radius	Default value	Unit	apply
		0～2	0		S

● 参数意义：

0: bipolar.

1: single positive polarity. The input is valid for positive polarity, and is forced to 0 for negative polarity.

2: Single negative polarity. Input negative polarity is valid, positive polarity is forced to 0.

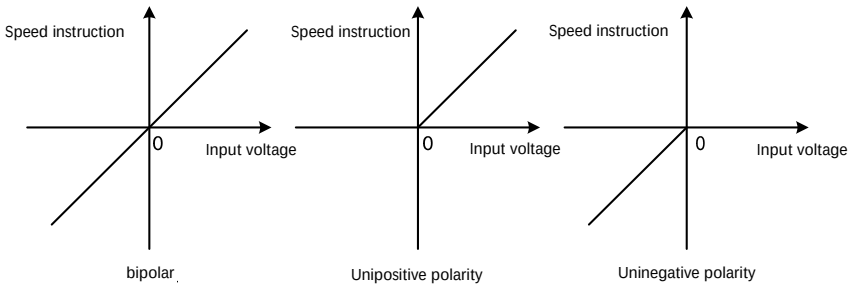

Pr051	Analog speed instruction dead zone 1	Radius	Default value	Unit	apply
		0～13000	0	mv	S

● When the input voltage is between dead zone 2(Pr052) and dead zone 1(Pr051), the command is forced to 0.

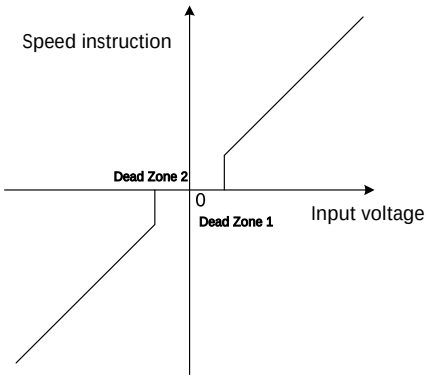

Pr052	Analog speed instruction dead zone 2	Radius	Default value	Unit	apply
		-13000～0	0	mv	S

● See the description of parameter Pr051.

Pr053	Simulated torque command gain	Radius	Default value	Unit	apply
		1～300	30	%/V	T

● Set the proportional relationship between the analog torque input voltage and the actual running torque of the motor, and the unit of the set value is 1%/V of the rated torque;

● The analog input range is -10V to 10V.

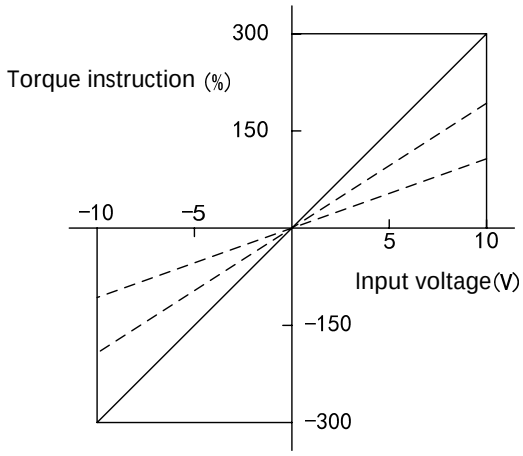

Pr054	Analog torque instruction zero bias compensation	Radius	Default value	Unit	apply
		-1500～1500	0	mv	T

- Analog torque input zero bias compensation, the actual torque instruction is the input an alog minus this parameter value.
- You can use the analog automatic zero function, this parameter is automatically set, refer to Section 3.6.2.

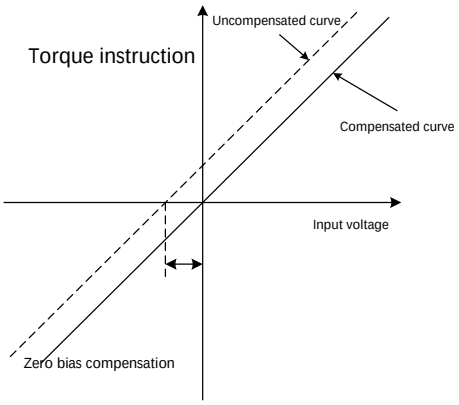

Pr055	Simulate torque instruction direction	Radius	Default value	Unit	apply
		0～1	0		T

- Parameter meaning:

Pr055	Positive polarity (positive	Negative polarity (negative
0	Forward turning (CCW) torque instruction	Reverse (CW) torque instruction
1	Reverse (CW) torque instruction	Forward turning (CCW) torque instruction

Pr056	Analog torque instruction filtering time constant	Radius	Default value	Unit	apply
		2～500	20	0.1ms	T

- Low pass filtering coefficient of analog torque input.
- The larger the setting, the slower the response speed of the input analog, which is conduciv e to reducing the interference of high-frequency noise. The smaller the setting, the faster the res ponse speed, but the high frequency noise interference.

Pr057	Simulates torque command polarity	Radius	Default value	Unit	apply
		0～2	0		T

- Parameter meaning:

0: bipolar.
1: single positive polarity. The input is valid for positive polarity, and is forced to 0 for negative polarity.
2: Single negative polarity. Input negative polarity is valid, positive polarity is forced to 0.

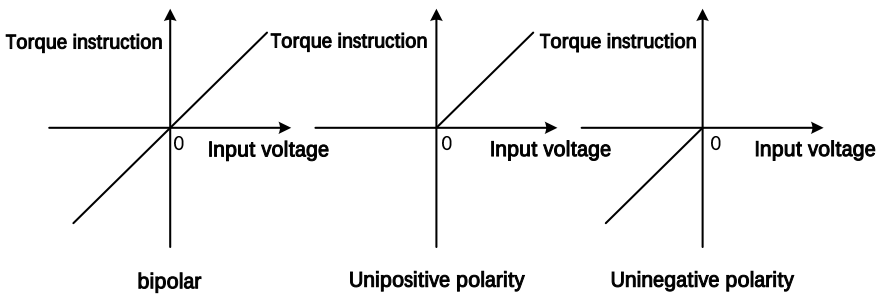

Pr060	Speed command acceleration time	Radius	Default value	Unit	apply
		0～10000	100	ms	S

- Set the motor acceleration time from zero speed to 1000r/min.
- Only for speed control mode, position control mode is invalid.
- If it is used in the speed control mode and the position control is closed loop with the up per mechanism, the parameter should be set to 0.

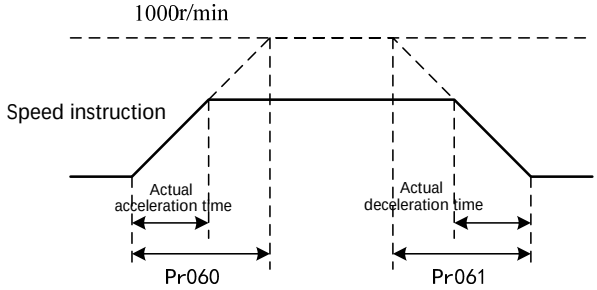

Pr061	Speed command deceleration time	Radius	Default value	Unit	apply
		0～10000	100	ms	S

- Set the motor deceleration time from 1000r/min to zero speed.
- Only for speed control mode, position control mode is invalid.
- If it is used in the speed control mode and the position control is closed loop with the up per mechanism, the parameter should be set to 0.

Pr063	EMG(Emergency Shutdown)/ALM Deceleration time	Radius	Default value	Unit	apply
		0～10000	1000	ms	ALL

- Works when the EMG (Emergency Stop) mode is decelerated to stop (Pr164 set to 1).
- When the alarm occurs stop mode is decelerated stop (Pr136 set to 1) function.
- Set the deceleration time from 1000r/min to zero speed when EMG (emergency shutdown) or alarm occurs, and the deceleration curve is linear.

Pr065	Internal forward turning (CCW) torque limit	Radius	Default value	Unit	apply
		0～300	300	%	ALL

- Set the internal torque limit for the CCW direction of the motor.
- This restriction is valid at all times.
- If the value exceeds the maximum overload capability, the actual limit is the maximum overl oad capability allowed by the system.

P066	Internal inversion (CW) torque limit	Radius	Default value	Unit	apply
		-300～0	-300	%	ALL

- Set the internal torque limit for the CW direction of the motor.
- This restriction is valid at all times.
- If the value exceeds the maximum overload capability, the actual limit is the maximum overl oad capability allowed by the system.

Pr067	External forward turning (CCW) torque limit	Radius	Default value	Unit	apply
		0～300	100	%	ALL

- Set the external torque limit for the CCW direction of the servo motor.
- This restriction is only valid if the TCCW(positive torque limit)ON the DI input is on.
- When the limit is effective, the actual torque limit is the minimum of the maximum overload capacity allowed by the system, the internal positive torque limit, and the external positive torqu e limit.

Pr068	External reversal (CW) torque limit	Radius	Default value	Unit	apply
		-300～0	-100	%	ALL

- Set the external torque limit for the CW direction of the servo motor.
- This restriction is only valid if the TCW(inverse torque limit)ON the DI input is on.
- When the limit is effective, the actual torque limit is the minimum absolute value of the max imum overload capacity allowed by the system, the internal reverse torque limit and the externa l reverse torque limit.

Pr069	Test run torque limit	Radius	Default value	Unit	apply
		0～300	100	%	ALL

- Set the torque limit value under the trial operation mode (speed JOG operation, keyboar d speed regulation, demonstration mode).
- Regardless of the direction of rotation, the forward reversal is limited.
- Internal and external torque limits remain in effect.

Pr070	Forward torque (CCW) overload alarm level	Radius	Default value	Unit	apply
		0～300	140	%	ALL

- Set the positive torque (CCW) overload value, which is a percentage of the rated torque.
- When the forward torque of the motor exceeds Pr070 and the duration is greater than Pr07 2, the driver will alarm with the alarm number Err-29 and the motor will stop.

Pr071	Reverse (CW) torque overload alarm level	Radius	Default value	Unit	apply
		-300～0	-140	%	ALL

- Set the Reverse (CW) torque overload value, which is a percentage of the rated torque.
- When the reverse torque of the motor exceeds Pr071 and the duration is longer than Pr072 , the driver will alarm with the alarm number Err-29 and the motor will stop.

Pr072	Torque overload alarm detection time	Radius	Default value	Unit	apply
		1～30000	10000	ms	ALL

- Refer to the description of parameters Pr070 and Pr071.

Pr075	Maximum speed limit	Radius	Default value	Unit	apply
		0～6000	3500	r/min	ALL

- Set the maximum allowable speed limit for the servo motor.
- It has nothing to do with the direction of rotation.
- If the set value exceeds the maximum speed allowed by the system, the actual speed will also be limited to the maximum speed.

Pr076	JOG running speed	Radius	Default value	Unit	apply
		0～5000	100	r/min	S

- Set the running speed of the JOG operation.

Pr078	Torque control when speed limit	Radius	Default value	Unit	apply
		0～5000	1000	r/min	T

- In torque control, the motor running speed is limited to this parameter.
- Can prevent light load speed phenomenon.
- When there is overspeed, the access speed negative feedback reduces the actual torque, b ut the actual speed will be slightly higher than the speed limit.9

Pr079	Speed limit error in torque control	Radius	Default value	Unit	apply
		1～5000	100	r/min	T

- When overspeed occurs, this parameter can adjust the speed negative feedback.
- The smaller the parameter value, the larger the negative feedback, the steeper the speed limit curve, and the smaller the overspeed, but too small may lead to jitter.

Pr080	Position out-of-tolerance detection	Radius	Default value	Unit	apply
		0～32767	400	0.01 圈	P

- Set the detection range of position out-of-range alarm.
- In the position control mode, when the value of the position deviation counter exceeds the pulse corresponding to the parameter value, the servo driver gives the position out-of-error alarm (Err4).
- The unit is the turn, multiplied by the resolution of each turn of the encoder, the number of pulses can be obtained. If the 2500 line encoder is used, the resolution of the encoder per turn is 10000, and the parameter value is 400, corresponding to 40000 encoder pulses.

Pr081	First encoder type selection	Radius	Default value	Unit	apply
		0～1	0		ALL

- Set the type of motor encoder;
- Parameter meaning: 0: non-provincial line photoelectric encoder; 1: provincial line type photoelectric encoder.

Pr082	Number of first encoder lines	Radius	Default value	Unit	apply
		1~32767	2500	脉冲	ALL

- Set the wire number of the motor encoder, the default setting is 2500 wire photoelectric encoder;
- For incremental encoders, the number of pulses per revolution ppr= the number of lines of the motor encoder *4.

Pr084	First encoder control parameter	Radius	Default value	Unit	apply
		0～11111	0		ALL

- Set the polarity of the motor encoder A/B signal: 0: A/B does not invert 1: A/B inverts

Pr097	Positive and negative limit usage mode/forward and reverse control	Radius	Default value	Unit	apply
		0～33	33		ALL

This feature is not available

- The forward drive prohibit (CCWL) and reverse drive prohibit (CWL) in the DI input are used for limit stroke protection. The normally closed switch is used. The motor can run in this direction only when the input is ON, and cannot run in this direction when it is OFF. If the limit stroke protection is not used, it can be ignored through this parameter, so that it can run without accessing the drive ban signal.
- The default value is ignore driver disable. To enable driver disable, modify the value first.
- Meaning of the units digit parameter:

Pr097 Units digit	Reverse drive disable (CWL)	Forward drive prohibited (CCWL)
0	Use	Use
1	Use	ignore
2	ignore	Use
3	ignore	ignore

Use: When the input signal is ON, the motor can run in this direction; The motor cannot run in this direction when OFF.
Ignore: the motor can run in this direction, the drive ban signal has no effect, you can not access the signal. Meaning of ten digit parameter: It is used with analog speed instruction in speed control mode

Pr097 Tens digit	Forward turn signal usage mode (analog speed command)	Reversal signal usage mode (analog speed command)
0	Use	Use
1	Use	non-use
2	non-use	Use
3	non-use	non-use

Usage: The speed instruction size is given by 0~10V analog quantity, and the direction is determined by forward and reverse input points.
Not used: The size and direction of the speed instruction are given by the -10V~10V analog, and the forward and reverse input points do not work.

Pr098	Force enable	Radius	Default value	Unit	apply
		0~1	0		ALL

Parameter meaning
0: Enables the control by the SON input of DI.
1: indicates that the software is forcibly enabled.

Pr099	Motor series code	Radius	Default value	Unit	apply
		0~15	0		ALL

- When the motor series is set, the UVW phase sequence of the motor power line of different series may be different, the encoder AB signal polarity and the offset Angle of the encoder installation may also be different;
- Wrong setting may lead to motor blockage or speed! Therefore, users must ensure that this parameter is correct before using the drive!
- Parameter meaning: For details, see Chapter 7 Motor adaptation table.

5.4.21-stage parameter

Pr100	Digital input DI1 function	Radius	Default value	Unit	apply
		-21～21	1		ALL

- Digits Enter DI1 function plan. Absolute values of parameters indicate functions, and symbols indicate logic. For details about functions, see Section 5.5.
- Symbols represent input logic, positive numbers represent positive logic, negative numbers represent negative logic, ON is valid, OFF is invalid:

Parameter value	DI input signal	DI result
Positive number	Open a way	OFF
	turn-on	ON
negative	Open a way	ON
	turn-on	OFF

- When multiple input channels have the same function selection, the function result is logical or relational. For example, if both Pr100 and Pr101 are set to 1(SON function), SON takes effect when either DI1 or DI2 is ON.
- The input function not selected by parameters Pr100 to Pr104, that is, the function is not planned, and the result is OFF(invalid). However, there are exceptions, setting parameters Pr120 to P124 can force the function ON(valid), regardless of whether the function is planned or not.

Pr101	Digital input DI2 function	Radius	Default value	Unit	apply
		-21～21	2		ALL

- For details about the DI2 function plan, see the description of parameter Pr100.

Pr102	Digital input DI3 function	Radius	Default value	Unit	apply
		-21～21	3		ALL

- For details about the DI3 function plan, see the description of parameter Pr100.

Pr103	Digital input DI4 function	Radius	Default value	Unit	apply
		-21～21	4		ALL

- For details about the DI4 function plan, see the description of parameter Pr100.

Pr104	Digital input DI5 function	Radius	Default value	Unit	apply
		-21～21	20		ALL

- For the DI5 function plan, see the description of parameter Pr100.

Pr105	Digital input DI6 function	Radius	Default value	Unit	apply
		-21～21	21		ALL

- Digit input DI6 function plan, see the description of parameter Pr100.

Pr108	Digital output DO1 function	Radius	Default value	Unit	apply
		-12～12	2		ALL

- Digital output DO1 function planning, the absolute value of the parameter indicates the function, the symbol indicates the logic, for details about the function, see section 5.6.
- 0 indicates forcible OFF and 1 indicates forcible ON.
- Symbols represent output logic, positive numbers represent positive logic, and negative numbers represent negative logic:

Parameter value	Corresponding function	DO output signal
Positive number	ON	turn-on
	OFF	cutoff
negative	ON	cutoff
	OFF	turn-on

Pr109	Digital output DO2 function	Radius	Default value	Unit	apply
		-12～12	3		ALL

- Digital output DO2 function planning, refer to the description of parameter Pr108.

Pr110	Digital output DO3 function	Radius	Default value	Unit	apply
		-12～12	5		ALL

- Digital output DO3 function planning, refer to the description of parameter Pr108.

Pr111	Digital output DO4 function	Radius	Default value	Unit	apply
		-12～12	8		ALL

- Digital output DO4 function planning, refer to the description of parameter Pr108.

Pr120	Digit input DI Mandatory valid 1	Radius	Default value	Unit	apply
		00000～11111	00000		ALL

- Corresponding functions are represented by 5-digit decimal notation:

digit	Dec5	Dec4	Dec3	Dec2	Dec1
Corresponding function	CWL	CCWL	ACLR	SON	NULL

- The function used to force DI input is valid. If the corresponding function bit is set to 1, the function is forced ON(valid).
- Refer to Section 5.5 for the meaning of the DI symbol.
- Parameter meaning:

A certain value in this parameter	Corresponding function [note]	Functional outcome
0	unplanned	OFF
	Have planned	Depends on the input signal
1	unplanned /Have planned	ON

Note: Planned refers to the function selected by parameters Pr100 to Pr105. Unplanned indicates the function that is not selected by parameters Pr100 to Pr105.

Pr121	Digit input DI Mandatory valid 2	Radius	Default value	Unit	apply
		00000～11111	00000		ALL

- Corresponding functions are represented by 5-digit decimal notation:

digit	Dec5	Dec4	Dec3	Dec2	Dec1
对应功能	CINV	CZERO	ZCLAMP	TCW	TCCW

- Description of other reference parameters Pr120.

Pr122	Digit input DI Mandatory valid 3	Radius	Default value	Unit	apply
		00000～11111	00000		ALL

- The corresponding function is expressed in 5-digit decimal notation

digit	Dec5	Dec4	Dec3	Dec2	Dec1
Corresponding function	TRQ2	TRQ1	SP3	SP2	SP1

- Description of other reference parameters Pr120.

Pr123	Digit input DI Mandatory valid 4	Radius	Default value	Unit	apply
		00000～11111	00000		ALL

- Corresponding functions are represented by 5-digit decimal notation:

digit	Dec5	Dec4	Dec3	Dec2	Dec1
Corresponding function	GEAR2	GEAR1	GAIN	CMODE	EMG

- Description of other reference parameters Pr120.

Pr124	Digit input DI Mandatory valid 5	Radius	Default value	Unit	apply
		00000～11111	00000		ALL

- Corresponding functions are represented by 5-digit decimal notation:

digit	Dec5	Dec4	Dec3	Dec2	Dec1
Corresponding function			PC	INH	CLR

- Description of other reference parameters Pr120.

Pr125	Digital input DIx filtering (DI1~DI6 share this filtering parameter)	Radius	Default value	Unit	apply
		1～1000	5	ms	ALL

- Digital filtering time constant of the DI input.
- The smaller the parameter value, the faster the signal response speed; The larger the parameter value, the slower the signal response speed, but the stronger the noise filtering ability.

Pr136	Enables off or the mode of stopping when an alarm occurs	Radius	Default value	Unit	apply
		0～1	0		P

- This parameter is used to set the mode of stopping when the drive is enabled off or an alarm occurs.
- Parameter meaning is:

0: The driver directly cuts off the motor current, and the motor stops freely.
1: The driver remains in the first enable state, controls the motor to slow down and stop at the deceleration time defined by Pr063, and then turns off the enable to cut off the motor current.

Pr137	Internal velocity 1	Radius	Default value	Unit	apply
		-5000～5000	0	r/min	S

- Internal speed 1, refer to parameter Pr025 description.

Pr138	Internal velocity 2	Radius	Default value	Unit	apply
		-5000～5000	0	r/min	S

- Internal speed 2, refer to parameter Pr025.

Pr139	Internal velocity 3	Radius	Default value	Unit	apply
		-5000～5000	0	r/min	S

- Internal speed 3, refer to parameter Pr025 description.

Pr140	Internal speed 4	Radius	Default value	Unit	apply
		-5000～5000	0	r/min	S

- Internal speed 4, refer to parameter Pr025 description.

Pr141	Internal speed 5	Radius	Default value	Unit	apply
		-5000～5000	0	r/min	S

- Internal speed 5, refer to parameter Pr025 description.

Pr142	Internal speed 6	Radius	Default value	Unit	apply
		-5000～5000	0	r/min	S

- Internal speed 6, refer to parameter Pr025 description.

Pr143	Internal speed 7	Radius	Default value	Unit	apply
		-5000～5000	0	r/min	S

- Internal speed 7, refer to parameter Pr025 description.

Pr144	Internal speed 8	Radius	Default value	Unit	apply
		-5000～5000	0	r/min	S

- Internal speed 8, refer to parameter Pr025 description.

Pr145	Internal torque 1	Radius	Default value	Unit	apply
		-300～300	0	%	T

- Internal torque 1, reference parameter Pr026 description.

Pr146	Internal torque 2	Radius	Default value	Unit	apply
		-300～300	0	%	T

- Internal torque 2, reference parameter Pr026 description.

Pr147	Internal torque 3	Radius	Default value	Unit	apply
		-300～300	0	%	T

- Internal torque 3, reference parameter Pr026 description.

Pr148	Internal torque 4	Radius	Default value	Unit	apply
		-300～300	0	%	T

- Internal torque 4, reference parameter Pr026 description.

Pr150	Location completion range	Radius	Default value	Unit	apply
		0～32767	10	pulse	P

- Set position control under positioning complete pulse range.
- When the number of remaining pulses in the position deviation counter is less than or equal to the value set by this parameter, the digital output DO COIN (positioning complete) ON, otherwise OFF.

Pr152	Location approach range	Radius	Default value	Unit	apply
		0～32767	500	pulse	P

- Set position control under positioning proximity pulse range.
- When the number of remaining pulses in the position deviation counter is less than or equal to the value set by this parameter, the digital output DO NEAR (near positioning) ON, otherwise OFF.
- The comparator has a back-difference function, set by parameter Pr153.
- When positioning is about to be completed, the upper computer receives the NEAR signal to prepare for the next step. Generally, the parameter value should be greater than Pr150.

Pr154	Arrival speed	Radius	Default value	Unit	apply
		-5000～5000	500	r/min	ALL

- When the motor speed exceeds this parameter, the digital output DO ASP (speed arrive) ON, otherwise OFF.
- The comparator has a back-difference function, set by parameter Pr155.
- Polarity setting function, controlled by parameter Pr156:

Pr156	Pr154	comparator
0	>0	Speed regardless of direction
1	>0	Only the forward speed is detected
	<0	Only the inversion speed is detected

Pr156	Arrival velocity polarity	Radius	Default value	Unit	apply
		0～1	0		ALL

- See the description of parameter Pr154.

Pr157	Arrival torque	Radius	Default value	Unit	apply
		-300～300	100	%	ALL

- When the motor torque exceeds this parameter, the ATRQ (torque arrival) of the digital output DO is ON, otherwise OFF.
- Polarity setting function, controlled by parameter Pr159:

Pr159	Pr157	comparator
0	>0	Speed regardless of direction
1	>0	Only the forward speed is detected
	<0	Only the inversion speed is detected

Pr159	Reach torque polarity	Radius	Default value	Unit	apply
		0～1	0		ALL

- See the description of parameter Pr157.

Pr160	Zero speed detection point	Radius	Default value	Unit	apply
		0～1000	10	r/min	ALL

- When the motor speed is lower than this parameter, the digital output DO ZSP (zero speed) ON, otherwise OFF.

Pr162	Zero speed clamp mode	Radius	Default value	Unit	apply
		0～1	0		S

- The zero-speed clamp function is turned on when the following conditions are met:

Condition 1: Speed control mode
Condition 2: ZCLAMP(zero-speed clamp)ON DI
Condition 3: Speed instruction is lower than parameter Pr160
If any of the above conditions are not met, normal speed control is performed.

- When the zero-speed clamp function is enabled, the meaning of this parameter is:

0: The motor position is fixed at the moment when the function is turned on. At this time, the internal access position control, even if due to external rotation, will return to the zero fixed point.
1: The speed command is forcibly set to zero when the function is enabled. The interior is still speed control, and it may be rotated by external forces.

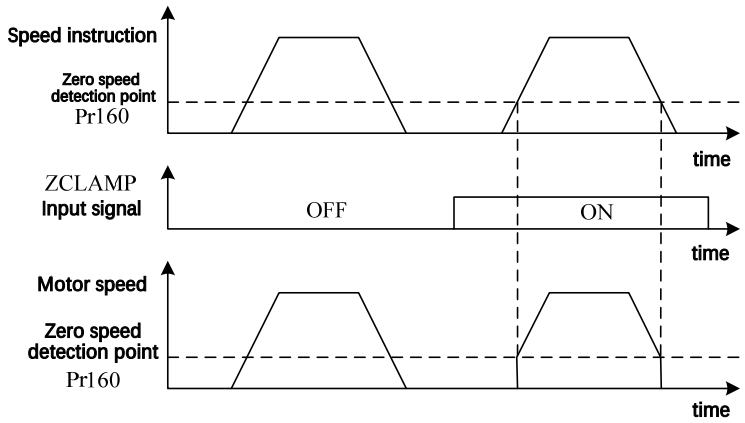

Pr164	Emergency shutdown mode	Radius	Default value	Unit	apply
		0～1	0		P

- When EMG (emergency stop) in drive DI is ON, this parameter is used to set the stop mod e.
- Parameter meaning is:

0: The driver directly cuts off the motor current, and the motor stops freely;
1: The drive remains in the enabled state, and the motor is controlled to slow down and stop at the acceleration and deceleration time defined by Pr063.9

Pr165	Motor static speed detection point	Radius	Default value	Unit	apply
		0～1000	5	r/min	ALL

- Motor static detection, motor speed is lower than the para meter value considered as static motor.
- Only used for electromagnetic brake timing judgment.

Pr166	Electromagnetic brake delay time when the motor is stationary	Radius	Default value	Unit	apply
		0～5000	500	ms	ALL

- Define the delay time from electromagnetic brake braking (DO output terminal BRKOFF) to motor current cut-off during motor rest when the system changes from enabled to disabled or when an alarm occurs.
- This parameter is to make the brake reliable after braking and then cut off the current, to avoid small displacement of the motor or workpiece drop. The parameter should not be less than the delay time of the mechanical braking.
- See Section 4.7 for the corresponding timing.

Pr167	Electromagnetic brake waiting time when the motor is running	Radius	Default value	Unit	apply
		0～5000	500	ms	ALL

- When the system changes from an enabled state to a non-enabled state or an alarm occurs , define the delay time from motor current cut-off to electromagnetic brake braking (DO output terminal BRKOFF) during motor operation.
- This parameter is to slow down the motor from the high-speed rotation state to the low speed, and then let the brake brake, to avoid damage to the brake;
- The actual operating time is the time required for the Pr167 or the motor to decelerate to the Pr168 value, whichever is the least of the two.
- See Section 4.7 for the corresponding timing.

Pr168	Speed of the electromagnetic brake when the motor is running	Radius	Default value	Unit	apply
		0～3000	100	r/min	ALL

- See the description of parameter Pr167.

Pr169	The delay time for the electromagnetic brake to open	Radius	Default value	Unit	apply
		0～5000	500	r/min	ALL

- When the system changes from the disabled state to the enabled state, define the delay time between motor current on and electromagnetic brake release (DO output terminal BRKON).
- See Section 4.7 for the corresponding timing.

5.5 Describes the DI functions

Special note: DI1~DI6 is a programmable input port, and its function is configured by parameters Pr100~Pr105; DO1 to DO4 are programmable outputs whose functions are configured by parameters Pr108 to P111. For details about the parameters, see Section 5.4.2 of Chapter 5. The specific functions are described as follows:

<table>
<tr><th>Serial number</th><th>symbol</th><th>Feature</th><th>Functional interpretation</th></tr>
<tr><td>0</td><td>NULL</td><td>non-function</td><td>The input status has no impact on the system.</td></tr>
<tr><td>1</td><td>SON</td><td>Servo enable</td><td>OFF: The servo drive is not enabled, and the motor cannot current.
ON: The servo drive is enabled and the motor is powered on.</td></tr>
<tr><td>2</td><td>ACLR</td><td>Alarm clearing</td><td>When there is an alarm, if the alarm allows clearing, the input rising edge (OFF changes ON instant) clears the alarm. Note that only some alarms allow clearing.</td></tr>
<tr><td>3</td><td>CCWL</td><td>Forward drive prohibited</td><td>OFF: Forward rotation (CCW) is prohibited.
ON: Allows forward rotation (CCW) rotation.
For mechanical limit stroke protection, the function is controlled by parameter Pr097. Look out
Pr097 The default value is ignore this function. To use this function, modify Pr097.
<table><tr><th>Pr097</th><th>Instructions</th></tr><tr><td>0</td><td rowspan="2">To use the forward drive disable function, the normally closed contact of the travel switch must be connected.</td></tr><tr><td>2</td></tr><tr><td>1</td><td rowspan="2">Ignore the forward drive prohibition function, the motor can run in the positive direction, the signal has no effect, no need to access.</td></tr><tr><td>3(default)</td></tr></table></td></tr>
<tr><td>4</td><td>CWL</td><td>Reverse drive disable</td><td>OFF: Forward rotation (CCW) is prohibited.
ON: Allows forward rotation (CCW) rotation.
For mechanical limit stroke protection, the function is controlled by parameter Pr097. Look out
Pr097 The default value is ignore this function. To use this function , modify Pr097.
<table><tr><th>Pr097</th><th>Instructions</th></tr><tr><td>0</td><td rowspan="2">To use the forward drive disable function, the normally closed contact of the travel switch must be connected.</td></tr><tr><td>1</td></tr><tr><td>2</td><td rowspan="2">Ignore the forward drive prohibition function, the motor can run in the positive direction, the signal has no effect, no need to access.</td></tr><tr><td>3(default)</td></tr></table></td></tr>
<tr><td>5</td><td>TCCW</td><td>Positive torque restriction</td><td>OFF: CCW direction torque is not limited by Pr067 parameters;
ON: CCW direction torque is limited by Pr067 parameters.
Note that whether TCCW is effective or not, the CCW directional torque is also limited by the parameter Pr065.</td></tr>
<tr><td>6</td><td>TCW</td><td>Inverse torque restriction</td><td>OFF: CW direction torque is not limited by Pr068 parameters;
ON: The CW direction torque is limited by the Pr068 parameter.
Note that whether TCW is valid or not, the CW direction torque is also limited by the parameter Pr066.</td></tr>
<tr><td>7</td><td>ZCLAMP</td><td>Zero speed clamp</td><td>The zero-speed clamp function is turned on when the following conditions are met:
Condition 1: Speed control mode;
Condition 2: ZCLAMPON;
Condition 3: Speed instruction is lower than parameter Pr160.
If any of the above conditions are not met, normal speed control is performed. For details, refer to parameter Pr162.</td></tr>
</table>

This feature is not available

This feature is not available

<table>
<tr><th>Serial number</th><th>symbol</th><th>Feature</th><th>Functional interpretation</th></tr>
<tr><td>8</td><td>CZERO</td><td>Zero instruction</td><td>Under speed or torque control, the speed or torque instructions are:
OFF: indicates normal command.
ON: zero instruction.</td></tr>
<tr><td>9</td><td>CINV</td><td>Instruction inversion</td><td>Under speed or torque control, the speed or torque instructions are:
OFF: indicates normal command.
ON: The command is reversed.</td></tr>
<tr><td>10</td><td>SP1</td><td>Internal speed option 1</td><td rowspan="3">For speed control, speed limit, SP1, SP2, SP3 combination select internal speed 1 ~ 8:
<table>
<tr><th colspan="3">DI signal [Note]</th><th rowspan="2">Speed instruction</th></tr>
<tr><th>SP3</th><th>SP2</th><th>SP1</th></tr>
<tr><td>0</td><td>0</td><td>0</td><td>Internal Speed 1(parameter Pr137)</td></tr>
<tr><td>0</td><td>0</td><td>1</td><td>Internal Speed 2(parameter Pr138)</td></tr>
<tr><td>0</td><td>1</td><td>0</td><td>Internal Speed 3(parameter Pr139)</td></tr>
<tr><td>0</td><td>1</td><td>1</td><td>Internal Speed 4(parameter Pr140)</td></tr>
<tr><td>1</td><td>0</td><td>0</td><td>Internal Speed 5(parameter Pr141)</td></tr>
<tr><td>1</td><td>0</td><td>1</td><td>Internal speed 6(parameter Pr142)</td></tr>
<tr><td>1</td><td>1</td><td>0</td><td>Internal speed 7(parameter Pr143)</td></tr>
<tr><td>1</td><td>1</td><td>1</td><td>Internal Speed 8(parameter Pr144)</td></tr>
</table>
Note：0 is OFF，1 is ON.</td></tr>
<tr><td>11</td><td>SP2</td><td>Internal speed option 2</td></tr>
<tr><td>12</td><td>SP3</td><td>Internal speed option 3</td></tr>
<tr><td>13</td><td>TRQ1</td><td>Internal torque option 1</td><td rowspan="2">For torque control and torque limitation, the combination of TRQ1 and TRQ2 selects internal torque 1~4:
<table>
<tr><th colspan="2">DI signal [Note]</th><th rowspan="2">Speed instruction</th></tr>
<tr><th>TRQ2</th><th>TRQ1</th></tr>
<tr><td>0</td><td>0</td><td>Internal torque 1(parameter Pr145)</td></tr>
<tr><td>0</td><td>1</td><td>Internal torque 2(parameter Pr146)</td></tr>
<tr><td>1</td><td>0</td><td>Internal torque 3(parameter Pr147)</td></tr>
<tr><td>1</td><td>1</td><td>Internal torque 4(parameter Pr148)</td></tr>
</table>
Note：0 is OFF，1 is ON.</td></tr>
<tr><td>14</td><td>TRQ2</td><td>Internal torque option 2</td></tr>
<tr><td>15</td><td>EMG</td><td>Emergency shutdown</td><td>OFF: Allow the servo drive to work;
ON: Stop the motor according to the mode set by parameter Pr164.</td></tr>
<tr><td>16</td><td>CMODE</td><td>Control mode switching</td><td>When parameter Pr004 is set to 3,4,5, the control mode can be switched:
<table>
<tr><th>Pr004</th><th>CMODE</th><th>Control mode</th></tr>
<tr><td rowspan="2">3</td><td>0</td><td>position</td></tr>
<tr><td>1</td><td>speed</td></tr>
<tr><td rowspan="2">4</td><td>0</td><td>position</td></tr>
<tr><td>1</td><td>torque</td></tr>
<tr><td rowspan="2">5</td><td>0</td><td>speed</td></tr>
<tr><td>1</td><td>torque</td></tr>
</table>
Note：0 is OFF，1 is ON.</td></tr>
<tr><td>17</td><td>GAIN</td><td>Gain switching</td><td>When parameter Pr176=2, the GAIN combination is switched by gain:
OFF: the first gain;
ON: indicates the second gain.</td></tr>
</table>

Serial number	symbol	Feature	Functional interpretation
18	GEAR1	Electronic gear option 1	The parameter Pr034 is used to configure the dynamic electronic gear application mode, as detailed in section 4.2.3.
19	GEAR2	Electronic gear option 2	
20	CLE	Position deviation clearance	Clear the position deviation counter
21	INH	Pulse input disable	OFF: position instruction pulse is allowed to pass. ON: Position instruction pulse is disabled.

5.6 DO Functional detail

Serial number	symbol	Feature	Functional interpretation
0	OFF	Have been ineffective	The output is forcibly OFF.
1	ON	Always in effect	Force output ON.
2	SRDY	Servo ready	OFF: The main power supply of the servo is not turned off or there is an alarm; ON: The main power supply of the servo is normal and there is no alarm.
3	ALM	Give an alarm	OFF: An alarm is generated. ON: No alarm is generated.
4	ZSP	Zero speed	OFF: motor speed higher than parameter Pr160(regardless of direction); ON: Motor speed is lower than parameter Pr160(regardless of direction).
5	COIN	Position complete	Position control time OFF: Position deviation greater than parameter Pr150; ON: Position deviation is less than Pr150.
6	ASP	Speed arrival	OFF: motor speed is lower than parameter Pr154; ON: Motor speed higher than parameter Pr154. With polarity setting function, refer to parameter Pr154 description.
7	ATRQ	Torque arrival	OFF: motor torque lower than parameter Pr157; ON: Motor torque higher than parameter Pr157. With polarity setting function, refer to parameter Pr157 description.
8	BRK	Electromagnetic brake	OFF: electromagnetic brake braking; ON: The electromagnetic brake is released.
9	RUN	Servo in operation	OFF: the servo motor is not powered on; ON: The servo motor is in power-on operation.
10	NEAR	Location approach	Position control time OFF: Position deviation greater than parameter Pr152; ON: Position deviation is less than Pr152.
11	TRQL	Torque limit	OFF: motor torque does not reach the limit value; ON: The motor torque reaches the limit value. The torque limiting method is set by parameter Pr064.
12	SPL	In speed limit	Torque control OFF: motor speed does not reach the limit value; ON: The motor speed reaches the limit value. The speed limit method is set by Pr077.

Chapter 6 Faults and diagnosis

6.1 Alarm list

Alarm code	Alarm name	Alarm content	Alarm clearing
E--	Alarm free	In good order	
E 1	overspeed	Motor speed exceeds maximum limit value	YES
E 2	Power main circuit overvoltage	The main circuit power supply voltage exceeds the specified value, check whether the brake resistance is damaged or whether the resistance value is appropriate	NO
E 3	Power main circuit undervoltage	The main circuit power supply voltage is lower than the specified value	NO
E 4	Position overshoot	Position tracking deviation exceeds set value	YES
E 5	Position command overclocked	The position instruction frequency exceeds the maximum allowable frequency	YES
E 6	Motor stalling	Motor power line connection error, pole number P-201 error	YES
E 7	Drive inhibit exception	The CCWL and CWL drive travel limit switch signal is abnormal	YES
E 9	The incremental encoder ABZ signal is faulty	The encoder ABZ signal is interfered or disconnected	YES
E10	The incremental encoder UVW signal is faulty	The encoder UVW signal is interfered or disconnected	YES
E11	The IPM module is faulty	The main power loop IPM inverter module is faulty	NO
E12	overcurrent	The instantaneous current of the servo driver is too large	YES
E13	Excess load	The average load current of the motor is too large	YES
E14	Brake peak power overload	Short braking time transient load is too large, check whether the brake resistance is damaged or the resistance value is appropriate	YES
E20	EEPROM error	An EEPROM read/write error occurs or a power failure occurs when parameters are saved	NO
E21	Logic circuit error	The peripheral logic circuit of the processor is faulty	NO
E23	The reference voltage of the AD conversion is incorrect	AD sampling circuit voltage reference is not a standard value	NO
E24	The AD conversion channel is asymmetrical or zero-drift large	The AD sampling amplifier conditioning circuit is abnormal	NO
E29	User torque overload alarm	Motor load exceeds the value and duration set by the user	YES
E30	Encoder Z signal is lost	Encoder Z signal does not appear	NO
E31	The encoder Z signal is detected abnormally	There is interference or signal instability in encoder Z signal	NO
E32	The encoder UVW signal is illegally encoded	Encoder UVW signal disconnected	NO
E33	Dart encoder signal error	There is no high resistance state in the power-on sequence	NO

6.2 Alarm cause and treatment

E1(overspeed)

reason	Inspect	handle
Motor connection U, V, W phase sequence error	Check the U, V, and W cables	Connect the U, V, and W wires correctly, corresponding to the U, V, and W labels of the driver plug
Motor speed overshoot	Check the running status and whether the maximum speed limit of parameter Pr075 is appropriate	Adjust servo gain to reduce overshoot; When the speed is controlled, the acceleration and deceleration time can be increased
Encoder wiring error	Check encoder wiring	Correct wiring

E 2(Main circuit overvoltage)

reason	Inspect	handle
The input AC power is too high	Check the supply voltage	Make the voltage conform to product specifications
Regenerative braking fault	Regenerative brake resistance, brake tube failure or disconnected wiring	repair
Regenerative braking energy is too large	Check the brake load ratio	Reduce start-stop frequency Increase acceleration and deceleration time Reduce the torque limit value Reduce load inertia Replace the drive with more power and the motor with greater brake resistance

E 3(Main circuit undervoltage)

reason	Inspect	handle
The input AC power is too low. Procedure	Check the supply voltage	Make the voltage conform to product specifications

E 4(Position overshoot)

reason	Inspect	handle
Motor connection U, V, W phase sequence error	Check the U, V, and W cables	Connect the motor U, V, and W wires correctly, corresponding to the U, V, and W labels of the driver plug
Encoder zero change	Check encoder zero	Reinstall encoder and zero
Encoder wiring error	Check encoder wiring	Correct wiring
Motor stuck	Check motor and mechanical connections	repair
The command pulse frequency is too high	Check the input frequency and pulse frequency doubling parameters	Lower input frequency Adjust pulse frequency doubling parameters
The position loop gain is too small	Check parameters P009 and P013	Increase the position loop gain
The out-of-range detection is too small	Check parameter P080	Example Add the value of P080
Insufficient torque	View torque	Increase the torque limit value Increase position instruction smoothing filtering time to reduce load Replace more powerful drives and motors

E 5(Position command overclocked)

reason	Inspect	handle
The command pulse frequency is too high	Check that the input frequency and electronic gear ratio are set correctly	Lower input frequency Set P029 and P030 correctly
The interval between motor enablement and command pulse is too short	Add a delay of at least 500ms between the upper computer giving the enable and sending the pulse (wait for the motor to be fully stimulated)	Modify the sequence of the upper computer
The instructions of the upper computer are not processed for acceleration and deceleration or the acceleration and deceleration time is too short	Whether the acceleration and deceleration time of the upper computer sending position instructions is set reasonably	Increase the time of acceleration and deceleration of instructions sent by the upper computer Appropriately increase the position instruction smoothing filter coefficient P040

E 6(Motor stalling)

reason	Inspect	handle
Motor stuck	Check motor and mechanical connections	overhaul
Motor connection U, V, W phase sequence error	Check the U, V, and W cables	Connect the motor U, V, and W wires correctly, corresponding to the U, V, and W labels of the driver plug
Encoder wiring error	Check encoder wiring	Correct wiring
Motor overload	Check whether the load current D7-i is too large	Load reduction Increase the torque limiter P065 and replace the P065 with a more powerful drive

E 7(Drive inhibit exception)

reason	Inspect	handle
Both CCWL and CWL drive disable input are invalid when the servo is enabled	Check cables to the CCWL and CWL	Input CCWL and CWL signals correctly If CCWL and CWL signals are not used, the parameter P097 can be set to shield

E 9(The encoder AB signal is faulty)

reason	Inspect	handle
Encoder wiring error	Check encoder wiring	Correct wiring
Encoder cables and connectors are poor	Check cables and connectors	Replace cables and connectors
Encoder failure	Check encoder	Change encoder

E 11(Power module fault)

reason	Inspect	handle
Short circuit between U, V and W	Check the U, V, and W cables	Connect the U, V, and W cables correctly
Motor winding insulation damage	Check motor	Replace motor
Drive damage	Check drive	Motor no problem, power on again or alarm, may be the drive is damaged, replace the drive
Poorly grounded	Check the grounding wire	Correct grounding
Be disturbed	Check for interference sources	Add line filters away from interference sources

E12(overcurrent)

reason	Inspect	handle
Short circuit between U, V and W	Check the U, V, and W cables	Connect the U, V, and W cables correctly
Motor winding insulation damage	Check motor	Replace motor
Drive damage	Check drive	Motor no problem, power on again or alarm, may be the drive is damaged, replace the drive

E13(Excess load)

reason	Inspect	handle
Continuous operation above rated load	View load rate d 16Ld	Reduce the load or switch to a more powerful drive
System instability	Check whether the motor runs oscillating	Reduce system gain
Acceleration and deceleration too fast	Check whether the motor runs smoothly	Increase the acceleration and deceleration time
Encoder zero change	Check encoder zero	Reinstall encoder and zero

E14(Brake peak power overload)

reason	Inspect	handle
The input AC power is high	Check the supply voltage	Make the voltage conform to product specifications
Regenerative braking fault	Regenerative brake resistance, brake tube failure or disconnected wiring	repair
Regenerative braking energy is too large	Check the brake load ratio	Reduce start-stop frequency Increase acceleration and deceleration time Replace the drive with more power and the motor with greater brake resistance
Encoder problem	Line count and pole count do not match encoder Z signal error encoder damage	Change encoder

E20 (EEPROM mistake)

reason	Inspect	handle
EEPROM Chip damage	Power on the device again	The fault persists. Replace the drive

E21(Logic circuit error)

reason	Inspect	handle
Control circuit fault	Power on the device again	The fault persists. Replace the drive

E23(AD The conversion reference voltage is incorrect)

reason	Inspect	handle
The current sensor and connector are faulty	Check the main circuit, upper and lower board connection cable is loose	Replace driver
AD converter and analog amplifier circuit problems	Check control circuit	Replace driver

E24(AD The conversion channel is asymmetrical or the zero drift value is too large)

reason	Inspect	handle
AD converter and analog amplifier circuit problems	Check control circuit	Replace driver

E29(User torque overload alarm)

reason	Inspect	handle
Unexpectedly large load occurred	Check the load	Check parameter
Parameters Pr070, Pr071, and Pr072 are incorrectly set	Check parameter	Adjustment parameter

E30(Encoder Z signal is lost)

reason	Inspect	handle
Encoder problem	Check the encoder Z signal	Change encoder
Encoder cable and connector problems	Check cables and connectors	Replace cables and connectors
The driver interface circuit is faulty	Check control circuit	Replace driver

E31(The encoder Z signal is detected abnormally)

reason	Inspect	handle
Encoder problem	Check the encoder Z signal	Change encoder
The encoder cable has interference	Check cables and connectors	Replace cables and connectors
The driver interface circuit is faulty	Check control circuit	Replace driver

E32(encoder UVW Signal illegal coding)

reason	Inspect	handle
Encoder problem	Check the encoder UVW signal	Change encoder
Encoder wiring error, disconnected	Check encoder wiring	Correct wiring, including shielded cables

E33(Dart encoder signal error)

reason	Inspect	handle
Encoder problem	Check encoder signal	Change encoder
Motor model/encoder type is not set correctly	Check the motor model to see if the motor is equipped with a dart encoder	Reset motor model/ encoder type

Chapter 7 Specifications and fitting motors

7.1 Model specifications and function introduction

Table 7.1 Driver model specifications

Model number		20PL	30PL	
input Power source	Main power supply	Single phase/three phase 220VAC -15%~+10% 50/60Hz		
environment	temperature	Job:0℃ ～ 40℃		Storage:-40℃ ～ 50℃
	humidness	Job:40% ～ 80%(Dew free)		Storage:93%以下(Dew free)
	Atmospheric pressure	86kPa ～ 106 kPa		
Class of protection		IP20		
Control mode		Position, speed, torque, position/speed, speed/torque, position/torque		
Digital input		6 programmable input terminals (optically isolated)		
Digital output		4 programmable output terminals (optically isolated)		
Encoder signal output	Signal type	A, B, Z differential output, Z signal collector open output		
position	Input frequency	Differential input：≤500kHz（kpps）； Single-ended input：≤200kHz（kpps）		
	Instruction mode	Pulse + direction; Forward/reverse pulse; Orthogonal pulse		
	Electronic gear ratio	1～32767/1 ～ 32767		
speed	Analog instruction	±10VDC，Input impedance 10kΩ		
	Command acceleration and deceleration	Parameter setting Pr060/Pr061		
	Instruction source	Analog quantity, internal speed instruction		
torque	Analog instruction	-10V ～ +10V，Input impedance 10kΩ		
	Torque limitation	Parameter setting Pr065/Pr066		
	Instruction source	Analog quantity, internal torque instruction		
Monitoring function		Speed, current position, position deviation, motor torque, motor current, command pulse frequency, etc		
Protection function		Overspeed, overvoltage, overcurrent, overload, brake anomaly, encoder anomaly, position aberration, command overclocking, etc		
peculiarity	Velocity-frequency response	≥800Hz		
	Velocity fluctuation	＜±0.03%(load 0～100%）；＜±0.02%(Power source -15% ～ +10%)		

7.2 Driver mounting dimensions

XP200-20PL Installation dimension drawing

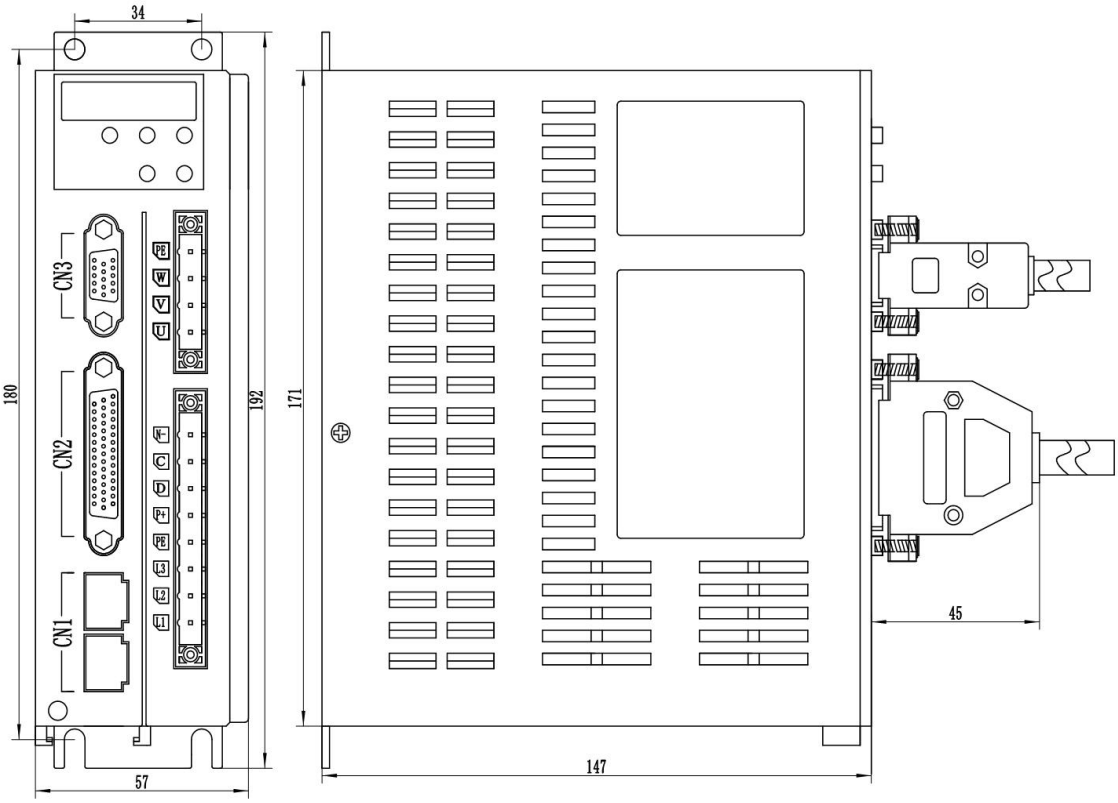

XP200-30PL Installation dimension drawing

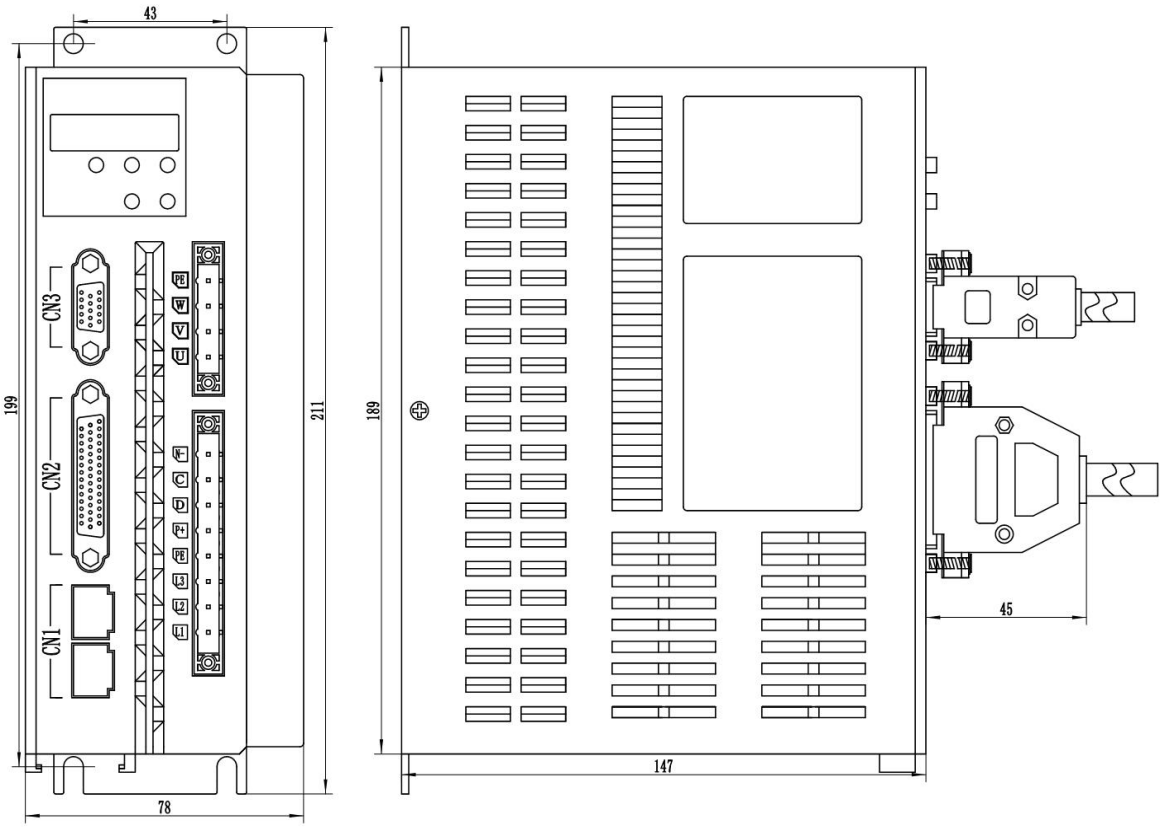

7.3 Motor fitting table

tabulation 7.2 XP200-**20PL/30PL** Driver ADAPTS to motor model

Motor type code (P002)	Adapter driver (AC 220V)	Servo motor type (220V)		Rated power (kW)	Rated current (A)	Rated torque (Nm)	Overload multiple
21	XP200-20PL	EC-F2CC020V-M2XM*A	60SG-M00630	0.2	1.2	0.6	3
22		EC-F2CC040V-M2XM*A	60SG-M01330	0.4	2.8	1.3	3
23		EC-F2CC060V-M2XM*A	60SG-M01930	0.6	3.5	1.9	3
27		EC-F3CC040V-M2XM*A	80SG-M01330	0.4	2.0	1.3	3
28		EC-F3CC075V-M2XM*A	80SG-M02430	0.75	3.0	2.4	3
29		EC-F3CC073T5-M2XM*A	80SG-C03520	0.73	3.5	3.5	3
30		EC-F3CC100U-M2XM*A	80SG-M04025	1.0	4.4	4	2.5
34		EC-F4CC060V-M2XM*A	110SG-M02030	0.6	2.5	2	3
35	XP200-30PL	EC-F4CC120V-M2XM*A	110SG-M04030	1.2	5	4	3
36		EC-F4CC150V-M2XM*A	110SG-M05030	1.5	6	5	2.5
37		EC-F4CC120T-M2XM*A	110SG-M06020	1.2	4.5	6	3
38		EC-F4CC180V-M2XM*A	110SG-M06030	1.8	6	6	2.5
44		EC-F5CC100U-M2XM*A	130SG-M04025	1	4	4	2.5/3
45		EC-F5CC130U-M2XM*A	130SG-M05025	1.3	5	5	2/3
46		EC-F5CC150U-M2XM*A	130SG-M06025	1.5	6	6	2.5
47		EC-F5CC200U-M2XM*A	130SG-M07725	2.0	7.5	7.7	2
48		EC-F5CC240V-M2XM*A	130SG-M07730	2.4	9	7.7	1.6
40		EC-F5CC100R-M2XM*A	130SG-M10010	1.0	4.5	10	2.2
49		EC-F5CC150S-M2XM*A	130SG-M10015	1.5	6	10	2.5
50		EC-F5CC260U-M2XM*A	130SG-M10025	2.6	10	10	1.5
52		EC-F5CC230S-M2XM*A	130SG-M15015	2.3	9.5	15	1.6

Chapter 8 Quick Debugging Guide

8.1 Quick debugging precautions

1. Make sure the wiring is correct

●Power terminal L1/L2/L3 and motor power terminal U/V/W, can not be reversed, do not loose phenomenon; ;

● L series input voltage must be three-phase or single-phase 220V, H series input voltage must be three-phase 380V ;

●The motor connection cable has no short circuit, must be reliably grounded ;

●Check the command cable and motor encoder cable, must be reliably connected ;

●The same motor connection must correspond to the same drive.

2. Determine the power-on sequence

●XP200 series servo driver adopts the integrated design of strong power and control power, the strong power and control power are turned on at the same time, the internal strong power is cut off first when the power is turned off, the display and control circuit will automatically power off after a few seconds of delayed discharge, please wait patiently ;

●If the servo motor with electromagnetic brake (lock) is equipped, the brake is not controlled by the servo driver, please ensure that the brake is energized (lock release) more than 0.5 seconds after the servo is enabled, in order to ensure the safety and position accuracy of the equipment ;

●In order to successfully use the servo drive, please read the following timing diagram carefully (for more detailed timing diagram, see Section 4.7 of this manual).

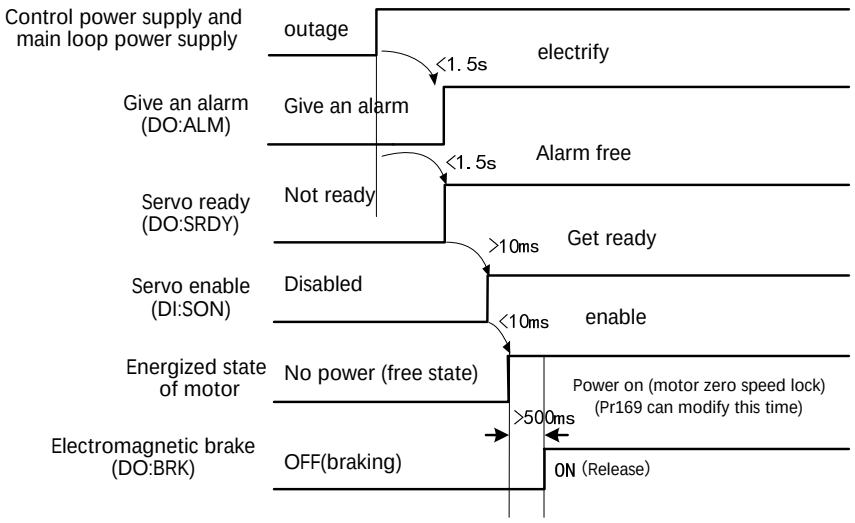

8.2 Position control mode (Quick debugging)

Example: XP200-30PL servo drive, suitable for F5CC230S-M2XM*A servo motor (position control)

1: After the power is powered on, the panel display is lit up. Measure the single-phase or three-phase 220V between the power terminals L1, L2, and L3

Voltage to ensure normal power supply;

2: temporarily do not turn on the servo enable signal, check whether there is an alarm, if there is no alarm, the work is normal, can proceed to the next step;

3: Start to adapt motor control parameters:

a)、The parameter modification mode is displayed "Pr-" , Changing the Operation Password(argumentPr000)is 316, Then modify the motor code (argument Pr002) For the required motor model, the motor model code is referred to the motor adaptation table in Section 7.2, this example Pr002 Set as 52;

b)、Enter the parameter management mode "EE-", Perform the operation to restore the default value as shown in the following figure.

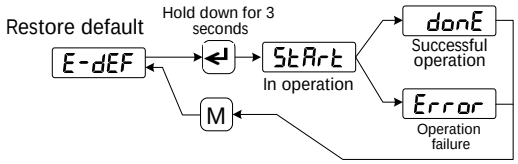

Restore the default values of all parameters

c)、 After the default value is restored successfully, set or check several key parameters of position control (as shown in Table 8.1 below). After confirming that no error is found, the host computer can give external enable signal SON (or internal enable: Pr098 Set to 1), give the pulse signal, observe the operation effect of the motor, and modify the gain and adjust the operation characteristics appropriately.

Table 8.1 Setting key parameters in Position Control Mode

argument	name	Set value	Parameter description
Pr004	Control mode	0(default)	Set to position control mode
Pr029	Electronic gear molecule	1(default)	Electronic gear molecule
Pr030	Electronic gear denominator	1(default)	Electronic gear denominator
Pr035	Pulse input mode	0(default)	0: pulse + direction 1: Forward/reverse pulse 2: Orthogonal pulse
Pr036	Pulse input direction	0(default)	0: indicates the normal direction 1: The direction is reversed
Pr005	Velocity loop proportional gain	50(default)	To improve rigidity or reduce tracking error, the Pr005/ can be appropriately increased Pr009, each adjustment is 5
Pr006	Velocity loop integral time constant	20(default)	
Pr009	Position loop proportional gain	40(default)	
Pr007	Torque filtering time constant	25(default)	When the motor is running and produces vibration or noise, it can be appropriately adjusted to 5 per adjustment
Pr019	Velocity detection filter time constant	35(default)	

8.3 Speed Control Mode (Quick Debugging)

Example: XP200-30PL servo drive, suitable for F5CC150S-M2XM*A servo motor (speed control)
1: After power on, the display panel is lit up, and the single-phase or three-phase 220V voltage between the power terminals L1, L2 and L3 is measured to ensure that the power supply is normal;
2: Ensure that the differential input or single-ended input connection of the speed analog is correct;
3: temporarily do not turn on the servo enable signal, check whether there is an alarm, if there is no alarm, the work is normal, can proceed to the next step;
4: Start to adapt motor control parameters:

a)、The parameter modification mode is displayed "Pr-", Change the operation password (parameterPr000) for 316，Then modify the motor code (parameters Pr002) For the required motor model, motor model code refer to the motor adaptation table in section 7.2, this example Pr002 Set as 49；

b)、Enter the parameter management mode "EE-" , Perform the operation to restore the default value as shown in the following figure.

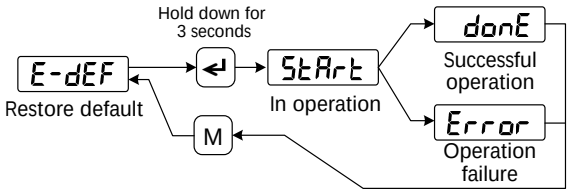

Restore the default values of all parameters

c) After the default value is restored successfully, set several key parameters of speed control (as shown in Table 8.2), then switch to "E-SEt" and hold down ↵ key for 3 seconds to save the parameters. After the saving is successful, power off and restart. The upper computer can give the external enable signal SON(or the internal enable : Pr098 is set to 1), and after the enable indicator is on, the analog quantity can be automatically zeroed (see Section 3.6.2 for details), the analog quantity command can be given, the motor running effect can be observed, and the gain can be appropriately modified to adjust the operating characteristics.

Table 8.2 Key parameter Settings of speed control mode

argument	Name	Set value	Parameter description
Pr004	Control mode	1	Set to speed control mode
Pr025	Speed instruction source	0(default)	0: analog speed 1: Internal multi-segment speed < 8 optional Pr137~ Pr144 Settings >
Pr046	Analog speed command gain	300(Default value) Set this parameter as required	1V analog voltage corresponding to the turn Speed (unit: r/min/V)
Pr047	Analog speed instruction zero bias compensation	0(default) Set as required	Unit: 0.lmv
Pr048	Analog speed instruction direction	0(default) Set as required	0: indicates the normal direction 1: The direction is reversed
Pr060	Speed refers to the current acceleration time	100(Default value) Set this parameter as required	1000 to 0rmin deceleration time(Unit: ms)
Pr061	Speed command deceleration time	100(Default value) Set this parameter as required	1000 to 0rmin deceleration time(Unit: ms)
Pr005	Velocity loop proportional gain	50(default)	To improve the rigidity, you can adjust the size Pr005, each adjustment is 5
Pr006	Velocity loop integral time constant	20(default)	If the load inertia is large, Pr006 can be adjusted appropriately, and the amount of each adjustment is 10
Pr007	Torque filtering time constant	25(default)	When the motor is running and produces vibration or noise, it can be appropriately adjusted to 5 per adjustment
Pr019	Velocity detection filter time constant	35(default)	

8.4 Torque Control Mode (Quick debugging)

Example: XP200-20PL servo drive, suitable for F3CC075V-M2XM*A servo motor (torque control)
1: After power on, the display panel is lit up, and the single-phase or three-phase 220V voltage between the power terminals L1, L2 and L3 is measured to ensure that the power supply is normal;
2: Ensure that the torque analog differential input or single-ended input wiring is correct;
3: temporarily do not turn on the servo enable signal, check whether there is an alarm, if there is no alarm, the work is normal, can proceed to the next step;

4： Start to adapt motor control parameters：

a)、The parameter modification mode is displayed "Pr-", Change the operation password (parameter Pr000) for 316，Then modify the motor code (parameters Pr002) For the desired motor model，Motor model code refer to the motor adaptation table in Section 7. 2, this example Pr002 Set as 28；

b)、Enter the parameter management mode "EE-", Perform the operation to restore the default value as shown in the following figure.

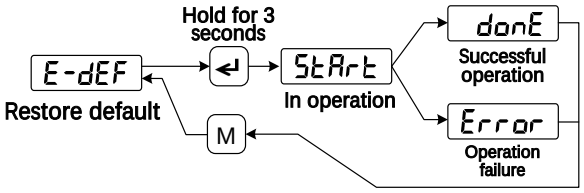

Restore the default values of all parameters

c)、After restoring the default value, set several key parameters of torque control (as shown in Table 8.3).Then the menu switches to "E-SEt" Press and hold ↵ key for 3 seconds to save the parameter. After saving successfully, power off and restart.

After confirmation, the host computer can give an external enable signal SON(or internal enable: Pr098 Set to 1), after the enable indicator is on, the analog quantity can be automatically zeroed (see Section 3.6.2 for details), the analog quantity command can be given, the operation effect of the motor can be observed, and the gain can be appropriately modified to adjust the operation characteristics.

Table 8.3 Key parameter Settings of torque control mode

argument	Name	Set value	Parameter description
Pr004	Control mode	2	Set to torque control mode
Pr026	Torque refers to the present source	0 (default)	0: analog torque 1: Internal multi-stage torque <4 optional Pr145~Pr148 Settings >
Pr053	Simulated torque command gain	30 (Default value) Set this parameter as required	1V analog voltage corresponding to the percentage of motor rated torque (unit: 1%/V)
Pr054	Analog torque instruction zero bias compensation	0 (default) Set as required	Unit: 0.1mv
Pr055	Simulate torque instruction direction	0 (default) Set as required	0: indicates the normal direction 1: The direction is reversed
Pr078	Torque control when speed limit	1000 (default) Set as needed	(Unit: r/min)

8.5 Debugging Typical Problems and Solutions

①、An error occurred when restoring default parameters

a、Confirm operation password（Pr000）Whether the value is correct, set it to 316.

b、The default operation must be restored when the drive is disabled.

②、The upper computer is enabled, but the driver is disabled

a、Check the power supply L1/L2/L3 voltage is low, wiring is correct;

b、Check whether the +24V input on the CN1 interface is correct.

c、Check whether the SON signal on the CN1 interface is connected to 0V.

d、If the drive is not enabled, enable it internally（Pr098 Set as 1）retry.

③、appear "E9/E10/E30/E31/E32/E33" Fault alarm

Note: The photoelectric encoder at the end of the servo motor is a typical fragile component, which needs special protection !

a、The above alarm indicates that there is a problem with the encoder or the encoder connection cable;
b、check whether the shielding layer is well grounded at both ends, whether the plug has water or impurities;
c、whether the connection line is too long to the encoder power supply 5V attenuation;
d、confirm whether it is a interference problem, whether there is a strong magnetic and strong electric line next to it, if so, isolation as far as possible.

④、Servo motor operation noise or vibration

a、Appropriately increase the filtering coefficients Pr007 and Pr019, each adjustment amount is 5;
b、If the effect of increasing the filter coefficient is not obvious, it is necessary to reduce the proportional gain of the speed loop and the proportional gain of the position loop, that is, to reduce Pr005 and Pr009, and the adjustment amount is 5 each time;
c、if the above measures are not significantly improved, please check whether there is interference in the encoder connection line, check whether the shield layer is well grounded at both ends.

⑤、The servo motor appears jitter during operation

a、 Determine whether the load and inertia of the servo motor are within the allowable range of the motor, if the load and inertia exceed the rated multiple of the motor too much (load torque is greater than 3 times, inertia is greater than 5 times), please re-select the motor with larger specifications;
b、 appropriately increase the proportional gain of the speed ring Pr005, each adjustment amount is 5;
c、If the effect of increasing Pr005 is not obvious, the filter coefficient Pr007/P-019 can be appropriately reduced, and the adjustment amount is 5 each time;
d、 if the effect of reducing the filter coefficient is not obvious, the position loop gain Pr009 can be adjusted appropriately, and the adjustment amount is 5 each time;
e、If the above measures are not significantly improved, please check whether there is interference between the encoder connection line and the instruction connection line, and check whether the shield layer is well grounded at both ends.

⑥、The drive has an E2 or E11 alarm

Determine whether the driver is powered on alarm or large inertia frequent acceleration and deceleration alarm:

a、If powered on, the alarm can determine that the driver's hardware circuit is faulty；

b、If large inertia frequent acceleration and deceleration alarm, check the monitoring menu first d7-1 and d8-P1, Observe whether the instantaneous value and maximum value of the current exceed the allowable range of the driver and the motor, if it exceeds the range, reduce the inertial acceleration accordingly (speed mode: increase the acceleration time Pr060 and deceleration time Pr061; Position mode: increase the acceleration and deceleration time of the upper computer controller), so that the current control is within the allowable range of the drive and motor, and check whether the fault disappears.

⑦、The drive appears when the servo motor starts “E 5/E12”

a、The occurrence of "E 5" indicates that the upper computer sends pulse instruction too fast, which exceeds the response capability of the servo motor. It is suggested to increase the acceleration and deceleration time of the upper computer, or appropriately increase the smoothing time of position instruction Pr040, and the adjustment amount is 10 each time.
b、If the above measures are invalid or the host computer cannot be modified, please set Pr116 to 32 to shield "E5" alarm;
c、If the "E12" overcurrent alarm appears in the driver during startup, it indicates that the load is too large when the motor starts. Please check whether the driver selection is too small or whether the driver is damaged.

⑧、Servo motor running drive appears “E 4”

a、If the low-speed operation is normal, and "E 4" appears in high-speed operation, please first check whether the maximum speed limit of Pr075 is low, and then appropriately increase the position loop gain Pr009 (each adjustment is 5), or appropriately increase the position out-of-error detection range Pr080;

b、if as long as the position instruction is given, no matter what speed, the motor appears "E 4" as soon as it runs, please determine whether the motor is blocked or damaged, and whether the drive strong circuit is damaged;

c、if "E4" appears when the acceleration is fast in operation, please confirm whether the driver and motor selection is too small;

d、If "E 4" occasionally appears during operation, please check whether there is interference between the encoder connection line and the instruction connection line, and check whether the shield layer is well grounded at both ends.

⑨、The drive runs normally, and the upper computer has "excessive position tracking error".

a、Determine the detection threshold of the upper computer position tracking error exceeding the limit, set the driver position error detection range Pr080 to a value less than the threshold, and observe whether "E 4" appears in the drive during operation;

b、 if the driver does not appear "E4", it means that the encoder signal sent back to the upper computer on the command connection line has interference, please check whether the connection line is welded reliably, whether the shield layer is well grounded at both ends;

c、if the driver appears "E4", it means that the driver and motor response problem, please first determine the integrity of the driver and motor, and then increase the position ring and speed ring gain Pr009/Pr005;

d、if the above measures have no obvious effect, you can consider the selection of a larger size of the driver and motor.

Chapter 9 Description of communication functions

9.1 Function overview and wiring diagram

The XP200 servo driver has RS-485 serial communication interface, which can control the servo system, change parameters and monitor the status of the servo system by MODBUS protocol. Cable connections to communication port CN1 are described as follows:

The communication port of XP200-20PL/30PL driver uses standard network cable port, shape and pin distribution are:

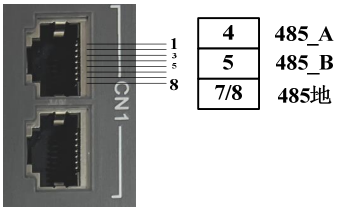

9.2 Communication parameter

Pr181	Drive communication ID	Radius	Default value	Unit
		-1～247	-1	

When RS-485 is used for communication, the upper controller is the host and the servo driver is the slave. The communication address of the servo drive must be set to a different communication station number. The setting range of the station number address is -1 to 247. The default value is -1, indicating that the communication function is disabled. Before using the communication function, this parameter must be set to the required station number, which represents the absolute address of the drive in the communication network. A group of servo drives can only set one station number. If the station number is set repeatedly, it will cause failure

Normal communication.

Pr182	MODBUS Communication baud rate	Radius	Default value	Unit
		0～3	2	

The baud rate of RS-485 communication is selected through this parameter. Different values correspond to different baud rates. The selected baud rate of communication must be consistent with that of the upper controller.

Parameter meaning:

0：Baud rate is 4800bps　　1：Baud rate is 9600bps

2：Baud rate is 19200bps　　3：Baud rate is 38400bps

Pr183	MODBUS communication data mode selection (only RTU data format is supported)	Radius	Default value	Unit
		0～5	1	

Select the data mode of RS-485 communication through this parameter, and the selected data mode must be consistent with the communication protocol of the upper controller. The specific parameter values are as follows:

0：	Data bits -8 bits	Check bit - None	Stop bit -1 bit
1：	Data bits -8 bits	Bit-even check (Even)	Stop bit -1 bit
2：	Data bits -8 bits	Check bit - Odd check	Stop bit -1 bit
3：	Data bits -8 bits	Check bit - None	Stop bit -2 bit
4：	Data bits -8 bits	Bit-even check (Even)	Stop bit -2 bit
5：	Data bits -8 bits	Check bit - Odd check (Odd)	Stop bit -2 bit

9.3 MODBUS Communication protocol

When RS-485 serial communication is used, each servo driver must set its communication station number on parameter Pr181 in advance, and the computer or upper controller can control the corresponding servo driver according to the station number. The baud rate needs to refer to the communication mode of the upper controller to set the parameter Pr182; MODBUS communication protocol only supports RTU (RemoteTerminalUnit) mode for the time being, and users can set the required communication data mode on the parameter Pr183 according to the requirements of the upper controller. After setting the preceding parameters, you need to save the parameters and power off and restart the drive to make the Settings take effect. The following describes the MODBUS communication.

Communication data structure：

RTU Mode:

MODBUS The application layer protocol defines a simple protocol data unit (PDU), as shown in the following figure, which does not depend on the underlying communication layer.

Address field	Function code	Data field	Check code

MODBUS starts with the address field, and the content of the address field is the valid address value (0 ~ 247). The host places the address value of the slave machine in the address field of the request information to determine the receiver of the request information. After the slave machine receives the information and completes the corresponding processing, it places its own address value in the address field of the response information. Let the host know which slave sent the response.

The address field is followed by the function code, which indicates what operation the slave will perform. After the function code is the data field, the data field contains the parameters of the request and response, and the format, length, and length of the data field depending on the function code

The meaning is also different.

The verification code is used to verify the validity of information and ensure the reliability of information transmission. In RTU mode, the 16-bit CyclicalRedundancyCheck (CRC) check is used.

In RTU mode, each 8-bit byte of data in the information frame is sent in two 4-bit hexadecimal codes, for example, 1byte of data 64H.

RTU mode is a bit-oriented transmission mode, which starts with the idle time of not less than 3.5 characters and then sends the address field. The network device monitors the communication bus, and receives the address field information after continuously monitoring the idle time of 3.5 characters. When the received address field information is judged to be valid, it continues to receive the subsequent information. Then perform the corresponding operation according to the function code and additional information. If the response information is required , the response information is encapsulated and sent to the host. The last byte sent after an idle time of approximately 3.5 characters indicates the end of the message frame, and a new message frame can be sent. RTU mode relies on simulated synchronization information to keep the frame synchronized, and the entire information frame must be transmitted as a continuous data stream at one time. If a continuous data stream is transmitted and the receiving device detects that there is more than 1.5 character intervals, it considers that a frame of data has been received and regards the next received character as the start of the next frame.

Under normal circumstances, the interval between information frames has at least 3.5 characters, that is, after sending a frame of data, at least 3.5 characters of idle time to send the next frame of data.

RTU The format of the information frame in this mode is:

START	Address field （ADR）	Function code （CMD）	Data field （DATA）	Check code （CRC）	END
T1-T2-T3-T4	8 bits	8 bits	n*8 bits	16 bits	T1-T2-T3-T4

Note: T1-T2-T3-T4 indicates a minimum time interval of 3.5 characters from the previous frame.

In RTU mode, each byte is sent in the following format:

Start bit	Data bit (low first)	Parity check bit	Stop bit
1 bit	8 bits	1 bit or no bit	1 bit or 2 bits

Character structure:

10bits character box (for 8bits characters without check)

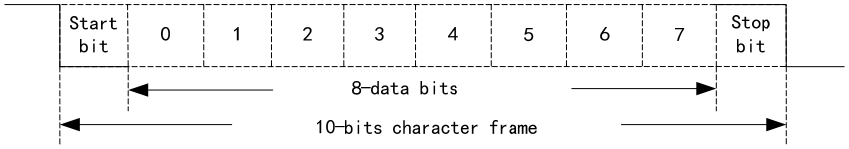

(8-bit data + no check +1 stop bit)

11bits character box (for 8bit characters plus check)

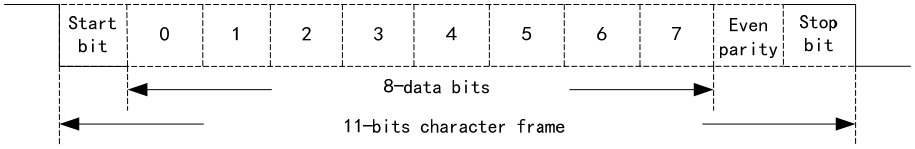

(8-bit data + parity +1 stop bit)

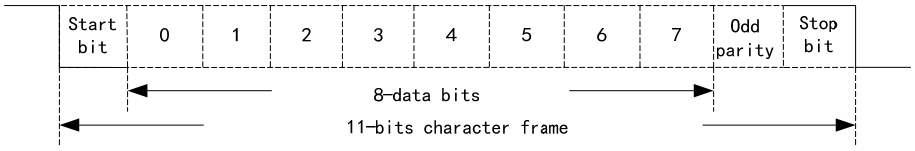

(8-bit data + odd check +1 stop bit)

Communication frame format:

The entries in the communication frame format box are described as follows:

START(start of communication)

RTU mode: The time interval from the previous frame is at least 3.5 characters.

ADR(mailing address)

Legal addresses range from 1 to 32, as follows:

To communicate with a servo drive with station number 16(hexadecimal 10H) :

RTU mode: ADR=10H

CMD(Function code) and DATA(Data field)

The format of the data characters depends on the function code. Common function codes are described as follows:

Command code 03H: Reads the parameter values of the drive

Command code 04H: read the operating status of the driver (such as motor speed, position, current, torque and other variable values) Command code 06H: write the parameters of the driver (single write)

Command code 41H: Write the parameters of the drive to EEPROM(parameter save)

CRC(RTU mode) frame check calculation:

RTU mode:

CRC(CyclicalRedundancyCheck) frame verification is adopted in RTU mode. CRC frame verification is calculated in the following steps:

Step 1: Initialize a 16-bit register with FFFFH content, called the CRC register.

Step 2: Perform an XOR operation on the first byte of the command information with the low byte of the 16-bitsCRC register and store the result back to the CRC register.

Step 3: Check the lowest position of the CRC register (LSB), if this bit is 0, move one bit to the right; If this bit is 1, the CRC register value is shifted one bit to the right, and then the XOR operation is performed with A001H.

Step 4: Go back to Step 3 until Step 3 has been executed 8 times, then go to Step 5.

Step 5: Repeat steps 2 to 4 for the next byte of the command information until all bytes have completed the above processing, then the content of the CRC register is CRC frame check.

Note: After calculating the CRC frame check, in the command information, you must first fill in the low CRC, and then fill in the high CRC, please refer to the following example.
For example, read parameter No. 05 in segment 0 of the servo drive whose station ID is 01H. The last content of the CRC register calculated from ADR to the last byte of the data is 3794H, then its command information is as follows, with the note that the byte 94H should be passed before the byte 37H.

ADR	01H
CMD	03H
Initial data location	00H (High byte)
	05H (Low byte)
Data number	00H (High byte)
	02H (Low byte)
CRC Low	94H (High byte)
CRC High	37H (Low byte)

END (end of communication) :
RTU mode: The time interval from the next frame is at least 3.5 characters.

Function code (CMD) :

The function code is 1 byte (8bits), which ranges from 1 to 255.

Function code (HEX)	Specific meaning	Modbus Meaning of protocol specification
03H	Read drive parameter values (multiple parameters can be read at the same time)	Read Holding Register
04H	Read the driver's operating state (such as motor speed, position, current, torque and other variable values, can read multiple states at the same time)	Read Input Register
06H	Write driver parameters (single write)	Write Single Register
10H	Write drive parameters (multiple writes)	Write Multiple Register
08h	Diagnostic function	Diagnostic
41H	Write the drive's parameters to EEPROM(save parameters)	

Various exceptions and errors may occur during communication. In order to enable these exceptions and errors to be recognized by the host, the corresponding exception codes are defined, as shown in the following table. When the slave receives an error message from the host or fails to complete a normal response, the slave sends an error response frame to the host, that is, the highest position of the function code byte is 1, and the corresponding ExceptionCode is placed in the data field.

Exception Code（HEX）	Mean
01h	ILLEGAL FUNCTION
02h	ILLEGAL DATA ADDRESS
03h	ILLEGAL DATA VALUE
04h	SLAVE DEVICE FAILURE
05h	ACKNOWLEDGE
06h	SLAVE DEVICE BUSY

9.4 Write and read parameters

For details about all parameters of the servo drive, refer to the parameter section of the debugging manual. Parameters are divided by parameter segment. Each parameter is represented by 16bits of data, and the communication address of each parameter is determined by the parameter serial number (ranging from 0 to 249), for example: The communication address of parameter Pr005 is 005 (decimal), that of parameter Pr108 is 108 (decimal), that of parameter Pr204 is 204 (decimal), and so on. All parameters described in the parameter section can be read through communication, but only some parameters are open to allow users to modify and write, and the parameters listed in the debugging manual are allowed to modify and write, and the other parameters that are not explained are the reserved parameters of the servo drive (users cannot write the reserved parameters, otherwise the servo drive may run abnormally). If you need to modify other parameters, contact our technical personnel.

9.5 Monitor status quantity address description

The internal status of the servo drive can be read through the RS-485 communication port, and the write operation is invalid. The state quantity is stored in 16bit data, providing a total of 40 state variables ranging from 0 to 39. The state quantity can be read by the following two functional codes:

（1）Function code (04H), address range 0x0000~0x0027

（2）Function code (03H), address range 0x1000~0x1027

Function code (04H) Read the status of the address (hexadecimal) is as follows:

0x0000: Motor speed, unit "r/min";
0x0001: The original position instruction (input pulse) is 16bit lower;
0x0002: Original position instruction (input pulse) high 16bit;
0x0003: Position instruction (pulse) low 16bit;
0x0004: Position instruction (pulse) high 16bit;
0x0005: Current motor position (pulse) is 16bit lower;
0x0006: Current motor position (pulse) high 16bit;
0x0007: Position deviation (pulse) is 16bit lower;
0x0008: Position deviation (pulse) high 16bit;
0x0009: Motor torque, unit "%" (percentage of rated torque);
0x000A: Peak torque, unit "%" (peak torque within 1s); <10>
0x000B: Motor instantaneous current, unit "0.1A" (12: indicates the motor real-time current 1.2A);
0x000C: motor peak current, unit "0.1A" (152: indicates that the maximum current within 1s is 15.2A); 0x000D: position instruction pulse frequency, unit "0.1kHz" (3000: indicates 300kHz);
0x000E: Speed instruction, unit "r/min";
0x000F: Torque instruction, unit "%"; The < 15 >
0x0010: Speed analog command voltage, unit "mV";
0x0011: Torque analog command voltage, unit "mV";
0x0012: Input terminal DI status, [Note 1];
0x0013: Output terminal DO status, [Note 2];
0x0014: Motor encoder absolute position (pulse) is 16bit lower; <20>
0x0015: Motor encoder absolute position (pulse) high 16bit;
0x0016: motor encoder multi-turn position (in the absence of multi-turn information, read 0 value);
0x0017: regenerative braking load rate, unit "%";

0x0018: Average load ratio, unit "%";
0x0019: Output voltage, unit "%"; The < 25 >
0x001A: Alarm code;
0x001B: Motor speed, unit "0.1r/min";
0x001C: Second encoder position (pulse) low 16bit;
0x001D: Second encoder position (pulse) high 16bit;
0x001E: The <30> DC bus voltage is reserved
0x001F: The absolute position of the motor is 16 bits lower (32-bit absolute position of multi-turn + single-turn data splicing) 0x0020: The absolute position of the motor is 16 bits higher (32-bit absolute position of multi-turn + single-turn data splicing) 0x0021: reserved
0x0022: Reserved
0x0023: Reserved <35>
0x0024: Reserved
0x0025: Reserved
0x0026: Reserved
0x0027: Reserved <39>

Function code (03H) Read the status of the address (hexadecimal) is as follows:

0x1000: Motor speed, unit "r/min"
0x1001: Original position instruction (input pulse) is 16bit lower;
0x1002: Original position instruction (input pulse) high 16bit;
0x1003: Position instruction (pulse) low 16bit;
0x1004: Position instruction (pulse) high 16bit;
0x1005: Current motor position (pulse) is 16bit lower;
0x1006: Current motor position (pulse) high 16bit;
0x1007: Position deviation (pulse) is 16bit lower;
0x1008: Position deviation (pulse) high 16bit;
0x1009: Motor torque, unit "%" (percentage of rated torque);
0x100A: Peak torque, unit "%" (peak torque within 1s); <10 >
0x100B: Instantaneous current of the motor, unit "0.1A" (12: indicates real-time current of the motor 1.2A);
0x100C: Motor peak current, unit "0.1A" (152: indicates that the maximum current within 1s is 15.2A); 0x100D: Position instruction pulse frequency, unit "0.1kHz" (3000: indicates 300kHz);
0x100E: Speed instruction, unit "r/min";
0x100F: Torque instruction, unit "%"; The < 15 >
0x1010: Speed analog command voltage, unit "mV";
0x1011: Torque analog command voltage, unit "mV";
0x1012: Input terminal DI status, [Note 1];
0x1013: Output terminal DO status, [Note 2];
0x1014: Motor encoder absolute position (pulse) is 16bit lower; < 20 >

0x1015: Motor encoder absolute position (pulse) high 16bit;
0x1016: Position of motor encoder multiple turns (read 0 value when there is no multi-turn information); 0x1017: regenerative braking load rate, unit "%";
0x1018: Average load ratio (unit: %);
0x1019: Output voltage, unit "%"; The < 25 >
0x101A: Alarm code;
0x101B: Motor speed, unit "0.1r/min";
0x101C: Second encoder position (pulse) is 16bit lower;
0x101D: Second encoder position (pulse) high 16bit;
0x101E: The <30> DC bus voltage is reserved
0x101F: The absolute position of the motor is 16 bits lower (32-bit absolute position of multi-turn + single-turn data splicing) 0x1020: The absolute position of the motor is 16 bits higher (32-bit absolute position of multi-turn + single-turn data splicing) 0x1021: reserved
0x1022: Reserved
0x1023: Reserved <35>
0x1024: Reserved
0x1025: Reserved
0x1026: Reserved
0x1027: Reserved <39>

[Note 1] : The data read from this address is 16bit, where bit5 to bit0 correspond to the input status of DI6 to DI1 respectively, "1" indicates the input high level, "0" indicates the input low level; bit15 to bit6 are reserved bits.
[Note 2] : The data read at this address is 16 bits, in which bit5 ~ bit0 indicates the output state of DO6 ~ DO1, "1" indicates the output high level, "0" indicates the output low level; bit15 to bit6 are reserved bits.

9.6 Communication instance

9.6.1 Read status (CMD=04H)

Use the read status function code (04H) to read all monitored state quantities in the servo drive, communication frame format description
As follows:
Note: A maximum of 8 states can be read each time.
The request frame format is as follows:

Address field 1byte	Function code 1byte	The starting address is 2bytes, with the high byte first	The number of read states is 2bytes, with the high byte first	The CRC verification code is 2bytes, starting with the lowest byte
0x01	0x04	0x00，0x00	0x00，0x01（N）	CRC_Lo, CRC_Hi

Normal response:

Address field 1byte	Function code 1byte	Number of bytes occupied by the status 1byte	Status value, 2Nbytes, high byte first	The CRC verification code is 2bytes, starting with the lowest byte
0x01	0x04	0x02（2N）	0xXX， 0xXX，……	CRC_Lo, CRC_Hi

Abnormal response:

Address field 1byte	Function code 1byte	The exception code is 1byte	The CRC verification code is 2bytes, starting with the lowest byte
0x01	0x84	0x01 or 02 or 03 or 04	CRC_Lo, CRC_Hi

An example is as follows:
Host sends frame:

ADDR	CODE	STADDR_H	STADDR_L	RNUM_H	RNUM_L	CRC_L	CRC_H
0x01	0x04	0x00	0x01	0x00	0x02	0xXX	0xXX

Slave response frame:

ADDR	CODE	BYTE_NUM	DATA1_H	DATA1_L	DATA2_H	DATA2_L	CRC_L	CRC_H
0x01	0x04	0x04	0xXX	0xXX	0xXX	0xXX	0xXX	0xXX

STADDR：Start address of the read status
RNUM：Number of states read
BYTE_NUM：Number of bytes of read status (for example, RNUM is 2, that is, 2 16-bit data, then BYTE_NUM is 2*2=4 bytes)
DATAX：Read back status value, X represents the serial number, DATA1 is the first data, DATA2 is the second data.

In this example, STADDR = 0x0001RNUM=0x02 indicates that two status data are read from the start address 0x0001 (that is, two status values of addresses 0x0001 and 0x0002). For details, see the previous section.

In the response frame, BYTE_NUM=0x04 indicates that the two status values read occupy 4 bytes, followed by DATA1, DATA2 is the status values at addresses 0x0001 and 0x0002.

9.6.2 Read parameter (CMD=03H)

All parameters in the drive can be read by using the read parameter function code (03H). The format of the communication frame is described as follows:

Note: A maximum of 8 parameters can be read each time.

The request frame format is as follows:

Address field 1byte	Function code 1 byte	The starting address is 2bytes, with the high byte first	The number of read parameters is 2bytes, with the high byte first	The CRC verification code is 2bytes, starting with the lowest byte
0x01	0x03	0x00，0x00	0x00，0x01（N）	CRC_Lo, CRC_Hi

Normal response:

Address field 1byte	Function code 1byte	Number of bytes used by the parameter 1byte	The value is 2Nbytes, with the high byte first	The CRC verification code is 2bytes, starting with the lowest byte
0x01	0x03	0x02（**2N**）	0xXX，0xXX，……	CRC_Lo, CRC_Hi

Abnormal response:

Address field 1byte	Function code 1byte	The exception code is 1byte	CRC check code 2bytes, starting with the lowest byte
0x01	0x83	0x01 or 02 or 03 or 04	CRC_Lo, CRC_Hi

An example is as follows:

Host sends frame:

ADDR	CODE	STADDR_H	STADDR_L	RNUM_H	RNUM_L	CRC_L	CRC_H
0x01	0x03	0x00	0x01	0x00	0x02	0xXX	0xXX

Slave response frame:

ADDR	CODE	BYTE_NUM	DATA1_H	DATA1_L	DATA2_H	DATA2_L	CRC_L	CRC_H
0x01	0x03	0x04	0xXX	0xXX	0xXX	0xXX	0xXX	0xXX

STADDR: Start address of the read parameter

RNUM: indicates the number of parameters to be read

BYTE_NUM: The number of bytes of the parameter to be read (for example, if RNUM is 2, that is, two 16-bit data, BYTE_NUM is 2*2=4)

DATAX: X is the serial number, DATA1 is the first parameter, DATA2 is the second parameter

This example sends frames STADDR = 0x01, RNUM=0x02, indicating that from the start address 1, read two parameters (that is, read the two parameters of addresses 0x01 and 0x02 P-001 and P-002).

In the response frame, BYTE_NUM=0x04 indicates that the two parameter values read take 4 bytes, followed by DATA1, DATA2 is the parameter values at addresses 0x01 and 0x02.

9.6.3 Write single parameter（CMD=06H）

The parameters listed in the debugging manual can be written using the write parameter function code (06H). The format of the communication frame is described as follows:

Note: Function code 06H can only write one parameter at a time. Before writing the parameters, please refer to the parameter manual to confirm the specific meaning of the parameters. Incorrect writing of the parameter value may cause the servo drive to run abnormally!

The request frame format is as follows:

The address field is 1byte	Function code 1byte	Parameter number 2bytes, high bytes first	The value of the parameter written 2bytes, high bytes first	CRC check code 2bytes, starting with the lowest byte
0x01	0x06	0x00，0x00	0x00，0x64	CRC_Lo, CRC_Hi

Normal response:

The address field is 1byte	Function code 1byte	Parameter number 2bytes, high bytes first	The value of the parameter written 2bytes, high bytes first	CRC check code 2bytes, starting with the lowest byte
0x01	0x06	0x00，0x00	0x00，0x64	CRC_Lo, CRC_Hi

Abnormal response:

The address field is 1byte	Function code 1byte	The exception code is 1byte	CRC check code 2bytes, starting with the lowest byte
0x01	0x86	0x01 or 02 or 03 or 04	CRC_Lo, CRC_Hi

An example is as follows:

Host sends frame:

ADDR	CODE	WADDR_H	WADDR_L	VALUE_H	VALUE_L	CRC_L	CRC_H
0x01	0x06	0x00	0x01	0x01	0x02	0xXX	0xXX

Slave response frame:

ADDR	CODE	WADDR_H	WADDR_L	VALUE_H	VALUE_L	CRC_L	CRC_H
0x01	0x06	0x00	0x01	0x01	0x02	0xXX	0xXX

WADDR: address of the write parameter

VALUE: The value to be written

In this example, ADDR=0x01 and VALUE=0x0102 are sent in the frame, indicating that the value 0x0102 is written to the parameter whose address is 0x01.

The response frame is the same as the send frame.

9.6.4 Write multiple arguments（CMD=10H）

The parameters listed in the debugging manual can be written using the write parameter function code (10H). The format of the communication frame is described as follows:

Note: Function code 10H can write multiple parameters at a time (the maximum number of parameters written at a time is 10). Before writing the parameters, please refer to the parameter manual to confirm the specific meaning of the parameters. Incorrect writing of the parameter value may cause the servo drive to run abnormally!

The request frame format is as follows：

Address field 1byte	Function code1byte	Start address value, 2bytes, high bytes first	Number of parameters to write , 2bytes, high bytes first (1~122)	The value is 1byte （0~255）	Parameter value, 2Nbytes, High byte first	The CRC verification code is 2bytes, starting with the lowest byte
0x01	0x10	0x00，0x00	0x00，0x02 （N）	0x04 （2N）	0xXX，0xXX，……	CRC_Lo, CRC_Hi

Normal response：

Address field 1byte	Function code1byte	Start address value, 2bytes, high bytes first	Number of parameters to write, 2bytes, high bytes first	CRC check code 2bytes, starting with the lowest byte
0x01	0x10	0x00，0x00	0x00，0x02 （N）	CRC_Lo, CRC_Hi

Abnormal response:

Address field 1byte	Function code1byte	Exception code 1byte	CRC check code 2bytes, starting with the lowest byte
0x01	0x90	0x01 or 02 or 03 or 04	CRC_Lo, CRC_Hi

An example is as follows:

Host sends frame:

ADR	CODE	SADRH	SADRL	WNUMH	WNUML	WNUMB
0x01	0x10	0x00	0x01	0x00	0x02	0x04

D1_H	D1_L	D2_H	D2_L	CRCL	CRCH
0xXX	0xXX	0xXX	0xXX	0xXX	0xXX

Slave response frame:

ADR	CODE	SADRH	SADRL	WNUMH	WNUML	CRCL	CRCH
0x01	0x10	0x00	0x01	0x00	0x02	0xXX	0xXX

SADR: Write parameter start address SADRH (high bytes) SADRL (low bytes)
WNUM: Number of parameters written WNUMH (high bytes) WNUML (low bytes)
WNUMB: The number of bytes to write to the parameter (for example, WNUM is 2, that is, 2 16-bit data, WNUMB is 2*2=4)
D1_H: high byte value of the first parameter written D1_L: low byte value of the first parameter written
D2_H: high byte value of the second parameter written D2_L: low byte value of the second parameter written
In this example, SADR=0x01 and WNUM=0x02 in the send frame means that two parameters (P-001 and P-002 at addresses 0x01 and 0x02) are written from the start address 1.

9.6.5 Diagnostic function（CMD=08H）

After the host sends a diagnostic frame, the slave (servo-drive) responds with the same data.

Tip: Diagnostic functions can be used to determine if MODBUS communication is normal.

Host sends frame:

ADDR	CODE	DATA_H	DATA_L	CRC_L	CRC_H
0x01	0x08	0x12	0x34	0xXX	0xXX

Slave response frame:

ADDR	CODE	DATA_H	DATA_L	CRC_L	CRC_H
0x01	0x08	0x12	0x34	0xXX	0xXX

The frame data sent by the slave and the frame data sent by the host should be exactly the same, so the diagnostic command can be used to check whether the communication is normal. DATA can be any custom data, for example, if the host sends 0xABCD, the slave also responds 0xABCD

9.6.6 Save parameter（CMD=41H）

The parameters of the drive can be stored to EEPROM by using the save parameter function code (41H). The format of the communication frame is described as follows:

Note: After the command is sent, the servo drive needs a certain period of time to save the parameters to the EEPROM. It is recommended that you wait at least 5 seconds after the command is sent before performing other operations.

The request frame format is as follows:

The address field is 1byte	Function code 1byte	CRC check code 2bytes, starting with the lowest byte
0x01	0x41	CRC_Lo, CRC_Hi

Normal response:

The address field is 1byte	Function code 1byte	CRC check code 2bytes, starting with the lowest byte
0x01	0x41	CRC_Lo, CRC_Hi

Abnormal response:

The address field is 1byte	Function code 1byte	Exception code 1byte	CRC check code 2bytes, starting with the lowest byte
0x01	0xC1	0x01 or 02 or 03 or 04	CRC_Lo, CRC_Hi

9.6.7 The servo is enabled/disabled

（**CMD=42H**）Request/Normal response：

The address field is 1byte	Function code 1byte	Enable Off flag 1byte	CRC Check code 2 bytes，Low byte first
0x01	0x42	0x55(enable) or 0xAA(shutoff)	CRC_Lo, CRC_Hi

Abnormal response:

The address field is 1byte	Function code 1byte	The exception code is 1byte	CRC Check code 2 bytes，Low byte first
0x01	0xC2	0x01 or 02 or 03 or 04	CRC_Lo, CRC_Hi

9.6.8 Alarm clearing（**CMD=43H**）

Request/Normal Response:

The address field is 1byte	Function code 1byte	CRC Check code 2 bytes，Low byte first
0x01	0x43	CRC_Lo, CRC_Hi

Abnormal response:

The address field is 1byte	Function code 1byte	Exception code 1byte	CRC Check code 2 bytes，Low byte first
0x01	0xC3	0x01 or 02 or 03 or 04	CRC_Lo, CRC_Hi