Operating instructions

Shielding Cabin

Type: VACOSHIELD® ADVANCED

Project -No.:

VACUUMSCHMELZE GmbH & Co. KG
Grüner Weg 37
63450 Hanau
Germany

Telephone: +49 61 81 38 – 0
Telefax: +49 61 81 38 26 45
Web: http://www.vacuumschmelze.com
Email: info@vacuumschmelze.com

issue 06/14
Original-Operating instructions

	NOTE
	These operating instructions are a component of the shielding cabin and must be available to the operating and maintenance personnel at all times. *The safety instructions included in it must be adhered to.* *In the event of a re-sale of the shielding cabin, the Operating instructions must always be included.*

Translation

In the case of delivery into countries in the EEA, the Operating instructions must be correspondingly translated into the language of the country of use. Should there be inconsistencies in the translated text, the original Operating instructions in German must be consulted or the manufacturer must be contacted.

Copyright

Sharing or reproduction of this document, commercialisation and communication of its content is strictly prohibited. Violations will incur an obligation to pay compensation for damages.
All rights reserved.

1 Content

1.1 Table of contents

1	**Content**	**3**
1.1	Table of contents	3
1.2	Table of illustrations	5
1.3	List of tables	5
1.4	Declaration of Conformity	6
2	**Overview and Proper Use**	**8**
2.1	Overview of the Unit	8
2.2	Proper Use	9
2.3	Technical Data	10
2.3.1	Product Specific Data	10
2.3.2	Dimensions and Weight	10
2.3.3	Energy Supply	13
2.3.1	Pneumatics	13
2.3.2	Foundation loading	14
2.3.3	General Data	14
3	**Safety**	**16**
3.1	Notes and Explanations	16
3.1.1	Explanation of the Safety Symbols Used	17
3.1.2	Shielding Cabin Label	18
3.2	Built-in Safety Systems	19
3.3	Interfaces in the Shielding Cabin	21
3.4	Safety Measures (to be completed by operator)	22
3.5	Obligations of the Operator	23
3.6	Safety Tests	25
4	**General Notes on Hazards**	**26**
4.1	Hazards	26
4.2	Hazardous Areas on the Shielding Cabin	27
4.3	Operation and Maintenance Personnel	28
4.4	Installation of Replacement Parts and Wearable Parts	29
4.5	Shut-Down Procedures	30
5	**Installation**	**31**
5.1	Scope of Delivery	31
5.2	Transportation and Packaging	32
5.2.1	Delivery (also for replacement and exchange parts)	32
5.2.2	Itnerim Storage	33
5.3	Transport to the Installation Site (from customer)	33
5.3.1	Technical Information for Transport	35
Set-Up, Assembly, Commissioning		37
6	**Schematic Diagramm**	**38**
6.1	Construction of the Shielding Cabin	38
6.2	Shielding	40
6.3	Pneumatic Switching	40

7	**Operation**	**41**
7.1	Opening and Closing the Door	41
7.2	Mechanical Emergency Release	42
7.3	Lighting	42
7.4	Machine Equipment	45
8	**Maintenance / Cleaning / Inspection Interval–Function Test**	**46**
8.1	Maintenance	48
8.1.1	General Maintenance Notes	48
8.1.2	Door Area	48
8.1.3	Escaping Air	49
8.1.4	Pneumatic connection	49
8.2	Cleaning	50
8.3	Inspection Interval–Function Test	51
8.4	Warnings on the Shielding Cabin	51
8.5	Checks on the Shielding Cabin	52
8.6	Replacement Parts-List	52
9	**Malfunction, Cause, Correction**	**53**
10	**Emergency**	**55**
11	**Disassembly / Disposal**	**55**
12	**Index**	**57**

1.2 Table of illustrations

Fig. 2-1	Overview of the shielding cabin	8
Fig. 2-2	Freestanding	11
Fig. 2-3	Mounting close to an operator wall	12
Fig. 2-4	Mounting in a corner	12
Fig. 2-5	Installation plan (static plan) for the shielding cabin	14
Fig. 3-1	Interfaces of Shielding Cabin	21
Fig. 5-1	Scope of delivery of the shielding cabin	31
Fig. 5-2	Transport with crane	35
Fig. 5-3	Transport with forklift	35
Fig. 6-1	Overview of the Shielding Cabin	38
Fig. 7-1	Front side	43
Fig. 7-2	Connection	44

1.3 List of tables

Tab. 1	Dimensions of the units	10
Tab. 2	Test intervals for safety systems	19
Tab. 3	Dimensions and weights of the transportation units	36
Tab. 4	Test intervals (abbreviations)	47
Tab. 5	Intervals for checks	48
Tab. 6	Intervals for cleaning	50
Tab. 7	Inspection interval – function tests	51
Tab. 8	Warnings on the shielding cabin	51

1.4 Declaration of Conformity

VACUUMSCHMELZE GmbH & Co. KG
Grüner Weg 37
D-63450 Hanau / Germany

Declaration of Conformity

In the sense of

- **EG-Guideline Machines 2006/42/EC**
- **EG-Guideline EMV 2004/108/EC**

We declare herewith that the construction of

Designation: **Shielding cabin**

Type: **VACOSHIELD® ADVANCED**

Project –No.: **XXX**

in the configuration delivered corresponds to the provisions stated above and the DIN EN–Norms listed below. Harmonised Norms according to the guidelines:

Guideline / Norm	Title
DIN EN 62079 :2001	Drafting instructions, outline, content and presentation
2004/108/EG	**EG-Guideline : EMV** *valid from 07.20.2007*
	Electromagnetic compatibility, emitted interference –commercial area
	Electromagnetic compatibility, interference immunity – industrial area
2006/42/EG	**EG-Guideline : Machine** *valid from 12.29.2009*
DIN EN 60204-1 :2007	Safety of Machines ; Electrical equipment in machines – Part 1: General requirements
DIN EN ISO 12100 :2010	Safety of Machines – General principles of design – Risk assessment and risk reduction
DIN EN 349 :1993 +A1:2008	Safety of Machines ; Minimum distances for avoidance of crushing body parts
DIN EN ISO 4414 :2010	Fluid technology – General rules and safety engineering requirements for pneumatic unit s and their components
DIN EN 953 :1997 + A1:2009	Safety of Machines – Dividing protective devices – General requirements for design and construction of fixed and movable dividing protective devices
DIN EN 1088 :1995 + A2:2008	Safety of Machines – Locking devices in combination with separating protective devices – Principles for design and selection
DIN EN ISO 13850 :2008	Safety of Machines – Emergency stops, principles of design
DIN EN 1037 :1995 + A1:2008	Safety of Machines – Preventing unexpected start-up
DIN EN ISO 13849-1 :2008	Safety of Machines – Safety-related components of control systems – Part 1: General principles of design
DIN EN ISO 13849-2 :2008	Safety von Machines – Safety-related components of control systems – Part 2: Validation

- This declaration refers only to the machine in the condition in which it was commissioned.
- The basic health and safety requirements according to *Appendix I* of the Machine-Guideline 2006*/42/EG* apply and will be observed.

- The special technical documents according to *Appendix VII A* were drafted and they are conveyed to the responsible national authorities on request in electronic form.
- Authorised persons for the compilation of technical documents in electronic form:
  Name: Markus Hein
  Address: Grüner Weg 37, 63450 Hanau, Germany

Hanau, on June 2nd, 2014 …….....

Signature of Staff Member
(Function, Title)

2 Overview and Proper Use

2.1 Overview of the Unit

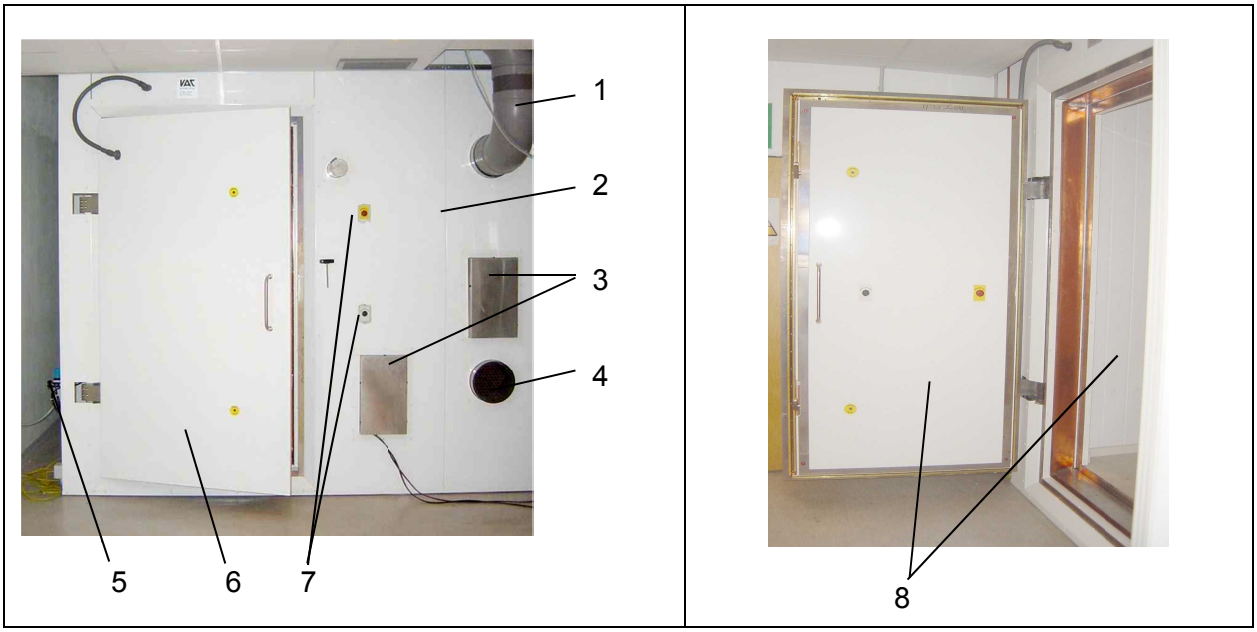

Fig. 2-1 Overview of the shielding cabin

The shielding cabin consists of the following main components:	
1 Fresh air supply	6 Access panel with pneumatic locking/unlocking mechanism
2 Cabin frame with aluminium shell and shielding walls of MUMETALL, insulation and exterior cladding	7 Locking/unlocking switch and emergency stop button
3 Feed-through (optional)	8 Interior cladding
4 Exhaust vent	9 Electrical installation and control/emergency system for lighting and door (not shown in picture)
5 Pneumatic connection	10 Lighting (optional)

2.2 Proper Use

The shielding cabin serves to eliminate and reduce magnetic interference, in order to be able to measure weak magnetic fields in the interior of the cabin.
The cabin is provided for setting up in an internal room.
The shielding cabin is used for the continuous elimination of interference from other magnetic or electromagnetic fields that could compromise measurement results.

The shielding cabin is a machine in the sense of the Machine Guideline and was developed, designed and built exclusively for research and commercial use.
Private use is excluded.

	DANGER *This shielding cabin was intended solely for the purpose stated above. Any use going beyond this or modification (drilling holes, etc.) of the shielding cabin without written agreement with the manufacturer is deemed improper.* *The manufacturer is not responsible for any damages resulting from this. The risk is borne solely by the operator. The shielding cabin may only be commissioned if it is assured that all safety equipment is installed and is functional.*

	NOTE *Products in which the explosive mixtures of dust and air are generated may not be processed with this shielding cabin! The shielding cabin does not meet any ATEX–prerequisites!*

Also included as proper use is the compliance with the controlling or operating instructions prescribed by the manufacturer as well as the maintenance and service conditions.

The operational lifespan of the shielding cabin extends to 10 years. Then an inspection (and general overhaul if needed) is required by the manufacturer or a specialised company.

2.3 Technical Data

2.3.1 Product Specific Data

	DANGER
	The materials/media to be employed in the proper operation of the shielding cabin will be acquired and employed by the operator of the shielding cabin. The proper handling of these materials/media and the therewith associated dangers are subject to the sole responsibility of the operator. Danger warnings as well as disposal instructions must be provided by the operator. Safety data sheets from the material and media manufacturers must be observed.

2.3.2 Dimensions and Weight

Shielding cabin (total):

Width:	ca.	3,508	mm
Depth:	ca.	4,519	mm
Height:	ca.	2,865	mm
Total weight:	ca.	7,200	kg
Floor loading:	ca.	__.__	kg/m^2

Cabin door:

Clearance width:		1,000	mm
Clearance height:		2,000	mm
Weight:	ca.	280	kg

	Length [m]	Breadth [m]	Height [m]
MUMETALL-interior surface	4.01	1.10	0.90
Interior decoration surface	2.60	1.10	0.90
MUMETALL-exterior surface	1.87	1.87	1.78
Exterior decoration surface	4.51	3.51	0.60

Tab. 1 Dimensions of the units

Space requirement

The space requirements are included in the set-up plan. The floor must be level so that the cabin stands plumb upright.

Minimum distance, mounting on room wall:		800	mm
Clearance to surrounding wall:	min.	600	mm
Clearance to surrounding door facing:	min.	1,500	mm
Room height for rack installation :	min.	3,100	mm
Room height for mounting in a corner :	min.	3,300	mm

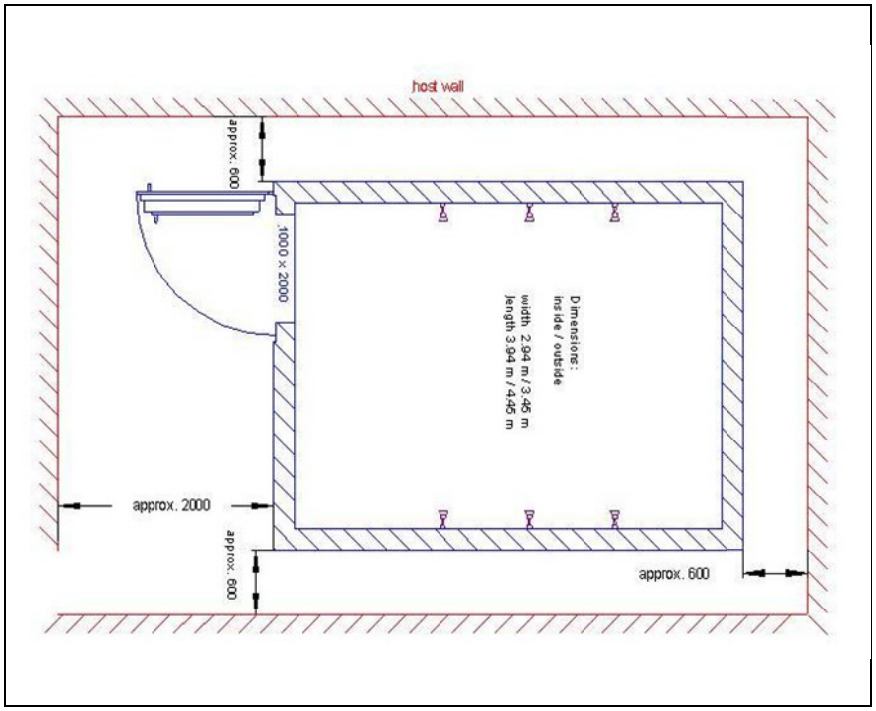

Fig. 2-2 Freestanding

Freestanding - at least 60 cm on 3 sides, min. 2 m on the door wall. **The required minimum room height is 2.9 m**.

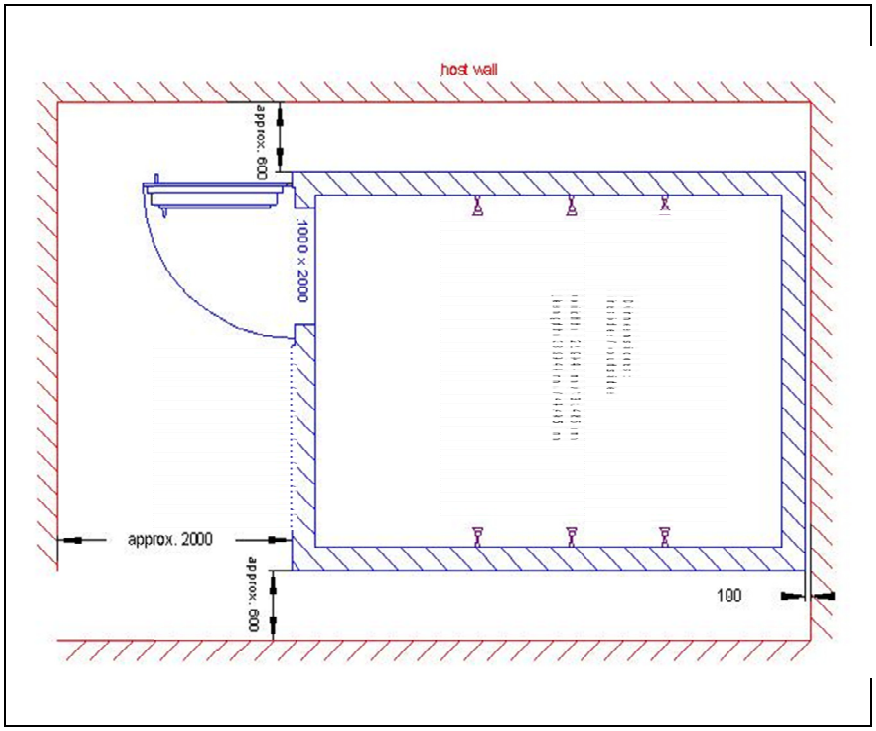

Fig. 2-3 Mounting close to an operator wall

Mounting close to an operator wall - 100 mm distance to the operator wall on the pre-assembly wall, min. 2 m to the door wall, 60 cm to the other walls. **Required minimum room height 2.9 m**.

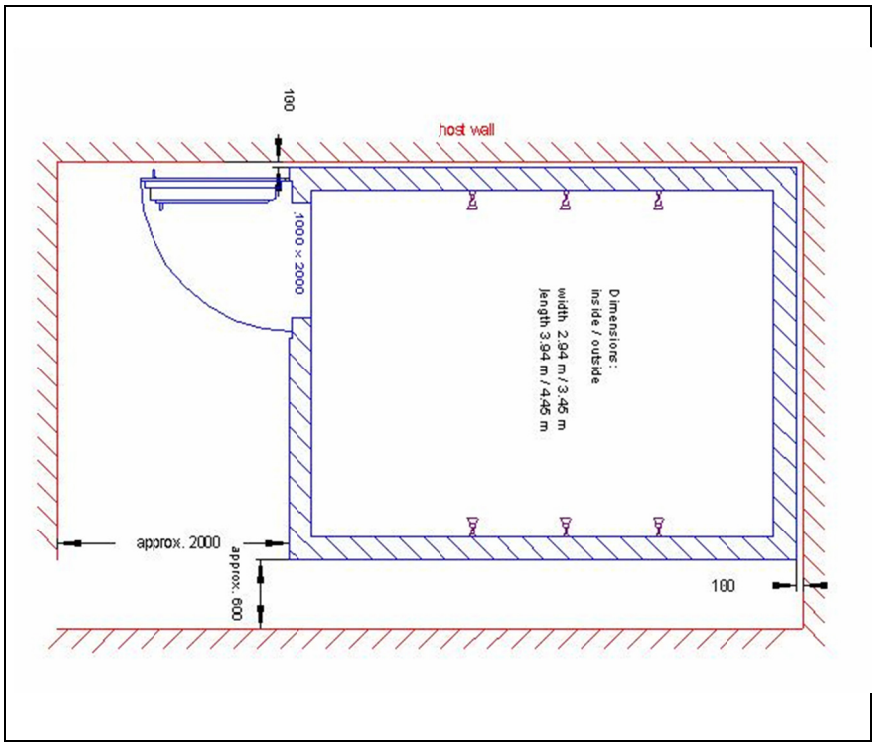

Fig. 2-4 Mounting in a corner

Mounting in a corner - 100 mm distance to operator wall on the pre-assembly walls, min. 2 m to the door wall, 60 cm to the other walls. **Required minimum room height 2.9 m**.

2.3.3 Energy Supply

Plug for power supply for lighting

Operating voltage:	1 AC 100 – 240 V + 6 %, -10 %
Central point conductor:	loadable N (in the unit)
Earthing conductor:	separate PL (yellow-green) (in the unit)
Frequency:	47 – 63 Hz
Rated power:	250 W
Protection class:	IP 40
Installation regulation:	executed acc. to VDE

Cabin lighting (optional)

Voltage (DC) adjustable:	5 – 12 V
max. current:	21 A
Rated power:	250 W

Emergency lighting (optional)

Voltage:	12 V, +/- 15 %
Current:	max. 5 A
Bridging:	ca. 5 h
Charge current:	ca. 650 mA
Charge voltage:	13.8 – 14 V
Charge duration:	ca. 14 h (full charge)

WARNING

In the event that the emergency lighting is not included in the cabin order, the operator is responsible for the installation of the emergency lighting.

2.3.1 Pneumatics

<u>Compressed air supply</u>

Compressed air (dry, filtered) with a

System pressure (manometer reading) of: input pressure may not exceed 8 bar

Operating pressure:	min.	4	bar
	typ.	6	bar
	max.	8	bar
Req. compr. air:	ca.	___	l/min.
Compr. Air quality:	oil-free, max. 10 µm foreign particles		

2.3.2 Foundation loading

Weight of the shielding cabin incl. all media:

Static load:	ca.	72	kN

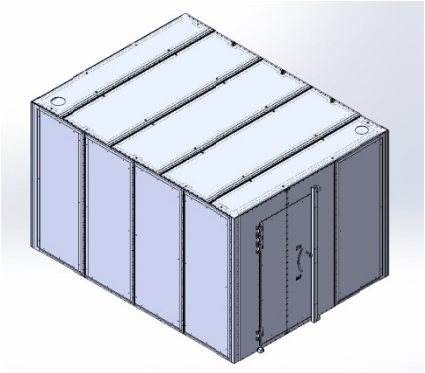

Fig. 2-5 Installation plan (static plan) for the shielding cabin

Weight of the shielding cabin maximal 7,200 kg.

2.3.3 General Data

Working temperature range

Lower temperature limit:	+	5°	C
Upper temperature limit:	+	35°	C
Switching cabinet / controls:	≤	35°	C
Relative humidity:	max.	65 %,	non-condensing
max. installation altitude: level	≤	1,000	m above sea

Storage conditions

Lower temperature limit:	-	20°	C
Upper temperature limit:	+	50°	C
Relative humidity:	max.	80 %,	non-condensing

Lighting
(work site lighting, operator-side,
acc. to ASR 7/3, Chap. 7.6) recommend: E_x = 300 Lux

	CAUTION
	The ambient conditions must be arranged such that the production cannot be subjected to detrimental influences after the machining process e.g. from air currents, dust or liquids from leaks, condensate or aerosols.

3 Safety

3.1 Notes and Explanations

	DANGER *"DANGER" warns of hazardous situations. Avoid these dangerous situations! They can result in serious injuries or death.*
	WARNING *"WARNING" warns of hazardous situations. Avoid these dangerous situations! They can result in serious injuries or death.*
	CAUTION *"CAUTION" in combination with the warning symbol warns of dangerous situations. Avoid these dangerous situations! They can result in serious injuries or death.*
	NOTE *"NOTE" gives you recommendations for action. Failing to observe them will not result in personal injuries. Follow recommendations for action in order to prevent damage to the materials and avoid difficulty!*
	NOTE *Notes in the Operating instructions / Documentation are identified with a "Book".*

3.1.1 Explanation of the Safety Symbols Used

	DANGER ***Hazards from electrical current*** *are indicated by the symbol to the left.*
	DANGER ***Crushing hazards, danger of injury to the hands*** *are indicated by the symbol to the left.*
	DANGER ***Suffocation hazards*** *are indicated with the symbol to the left.*
	DANGER ***Tripping hazards*** *are indicated with the symbol to the left.*
	DANGER ***Hazards from automatic activation*** *are indicated with the symbol to the left.*
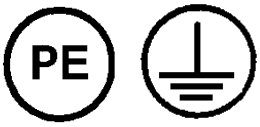	**NOTE** ***Protected earthing connection*** *is indicated at connection points by one of these symbols.*
	NOTE ***Environmental Mark*** *indicates measures for environmental protection.*

3.1.2 Shielding Cabin Label

	NOTE
	The statements in these operating instructions apply only for the shielding cabin, whose type–no. is given on the title sheet. *The type plate with the type–No. is located on the outer wall of the shielding cabin.* *The correct information for all queries is:* *- The designation "Shielding cabin"* *- the type–No. "VACOSHIELD® ADVANCED",* *- the machines - / Project –No. „XXX"* *This is the only way to assure accurate and rapid processing.*

3.2 Built-in Safety Systems

The built-in safety systems are to be inspected at regular inspection intervals and with the appropriate inspection methods (see the following table).

Inspection			Test Methods		
d	=	daily			
w	=	weekly	**V**	=	Visual inspection
m	=	monthly	**F**	=	Functional test
¼ y	=	quarterly	**M**	=	Measurement
½ y	=	semi-annual			
y	=	annual			

Tab. 2 Test intervals for safety systems

1 Line disconnector (plug) for cabin lighting

Inspection	
Interval	Method
y	**F**

The plug disconnects or connects the shielding cabin with the electrical supply. When completing cleaning, maintenance and repairs, the plugs must be pulled out and secured against accidental re-insertion.

DANGER

When completing cleaning, maintenance or repair work make sure that the correct fuses are disconnected in the fuse box.

2 Emergency Stop System /Emergency Unlock of Cabinet Door

Test	
Interval	Method
m	**F**

The machine is equipped with an emergency stop system. There is one emergency stop button each on the interior and exterior of the cabin door. Pressing it depressurises the pneumatic locking system and releases the door. The emergency stop button is unlocked by pulling it or turning it to the right.

3 Mechanical Emergency Unlock

If the locking bars should be blocked, the cabin door can be opened using an emergency unlocking mechanism. For this purpose there is an Allen wrench mounting on both the interior and exterior sides that you use to actuate the emergency unlocking mechanism.

Test	
Interval	Method
m	**F**

4 Emergency Lighting

The machine is equipped with emergency lighting in order to assure continued visibility in the event of a power cut

Test	
Interval	Method
m	**F**

5 Earthing

The shielding cabin is equipped with an earthed connection. The earthing of all conductive parts of the shielding cabin must be checked regularly.

Test	
Interval	Method
y	**S, F**
4 y	**M**

DANGER

The operator must make sure that unauthorised personnel are unable to enter the operating area (those who are not operations or maintenance personnel).

Operations and maintenance personnel will be trained at the set-up site for the shielding cabin by personnel from VACUUMSCHMELZE GmbH & Co. KG. Should questions or uncertainties crop up then please contact VACUUMSCHMELZE GmbH & Co. KG with your queries.

NOTE

These Operating instructions are a component of the shielding cabin and must always be available to the operating and maintenance personnel.

The safety notes included in it must be heeded.

In the event that the shielding cabin is re-sold, the Operating instructions must always go with it.

	WARNING
	Disabling safety equipment or modifying its function is absolutely forbidden. After malfunction, repairs or maintenance, all safety equipment must be completely re-installed.

3.3 Interfaces in the Shielding Cabin

Description of the interfaces in the shielding cabin for the operating personnel and the surroundings.

Fig. 3-1 Interfaces of Shielding Cabin

There are the following interfaces on the shielding cabin be:

1 Cabin door
2 Pneumatic connection
3 Exhaust outlet
4 Control cabinet (customer-side) with electrical plug for power supply for lighting
5 Control elements on the exterior side of the shielding cabin
6 Fresh air intake
7 Feed-through (optional)
8 Control elements in the interior of the shielding cabin (not shown in picture)
9 Control elements on the interior of the shielding cabin (not shown in the picture)

3.4 Safety Measures (to be completed by operator)

Note that the operator must:
- instruct operation and maintenance personnel concerning the **safety equipment** for the shielding cabin;
- supervise these personnel with respect to compliance with safety measures;

These operating instructions are to be kept for future use. The scheduled intervals for inspections and control measures must be observed.

The work described in these operating instructions is to be completed so that they are
- understood by a **specialist** as laid out in the chapters "Transport', "Set-Up and Assembly", "Maintenance", "Malfunction/ Cause / Troubleshooting".

The chapters **Transport, Set-Up and Assembly, Maintenance, Malfunction / Cause / Troubleshooting** are **only intended for specialists**. Work described in these chapters may only be completed by specialists.

Instructed Person
Defined as a person who has been instructed, and if necessary trained, by a specialist about the assigned tasks and possible dangers in the event of improper conduct, and also instructed concerning the necessary safety equipment and protective measures.
Specialist
Defined as a person with suitable training, suitable education and experience that enables him/her to recognise risks and avoid hazards.

The definition is based on EN 60204-1:2006.

3.5 Obligations of the Operator

	NOTE
	In EEA (European Economic Area) the national implementation of the master guideline (89/391/EEC) as well as the related individual guidelines (2009/104/EC) concerning the minimum regulations for health and safety protection of employees at work when using working equipment and materials, in each case in the currently valid version, must be heeded and complied with. *In Germany, the Occupational Safety Ordinance from October 2002 (BGV D1, BGV D1 DA) must be observed (implementation of the aforementioned national law).*

The operator must obtain the local **operating permit** and observe all of the associated requirements.

Additionally he must observe the local legal provisions for
- safety of personnel (OHS and accident prevention guidelines, workplace guidelines), e.g. operating instructions, personal protective gear (PPG), preventative inspections;
- the safety of the working equipment (protective gear, operating instructions, operating risks and maintenance);
- the product's qualities (safety data sheets, hazardous materials registry);
- product disposal (Waste Management Act);
- materials disposal (de-commissioning, Waste Management Act);
- maintain cleaning (cleaning agents and their disposal),
- as well as the current environmental ordinances.

Additionally, the operator
- Must provide *personal protective gear* (PPG);
- Keep up constant *risk assessment* in the workplaces including the assessment of hazardous materials and fire safety.
- Establish measures in *the operating instructions* and *instruct the personnel* in these measures appropriately;
- Insure training of the operating personnel;
- Draft and issue *work instructions*;
- Install safety equipment such as suitable portable fire extinguishers in the prescribed numbers and in easily accessible places;
- The operator must provide adequate coarse protection and surge protection for the unit's power supply to protect from lightning strike hazards.

- The operator must provide adequate lighting for the workstations according to ASR 7/3;
- The ventilation should be in operation at the work stations (= quality of outdoor air) outside of working hours as well at a minimum volume stream (germ loading);
- Areas with tripping hazards must be regularly inspected to make sure that they are marked for tripping hazards;
- The earthing connection for the shielding cabin must be provided by the operator.

Connections:
Prior to operating the shielding cabin, the operator must make sure that the applicable local regulations (e.g. for the electrical connection) are heeded in the assembly and commissioning, if these are completed by the operator.

	NOTE
	Strength of illumination: *The operator must provide for adequate and uniform lighting in all areas of the shielding cabin.* *Recommendation:* ***300*** ***Lux*** *(control sites* ***500*** ***Lux****), depending on area in the unit (maintenance value; in Germany ASR 7/3).*

	NOTE
	At least one annual ***safety training*** *(and in each case at the start of employment) concerning dangers and protective measures must be carried out based on these Operating instructions and in the language the employees understand. Participation must be confirmed with a signature (TRGS 555).*

3.6 Safety Tests

Completed by the manufacturer in the factory.

1. Risk assessment according to Machine-Guideline 2006/42/EG (acc. to Appendix I) as well as acc. to DIN EN ISO 12100:2011.
2. Test and inspection according to DIN EN 60204-1 (Edition 2007)
   - Inspection to determine that the electrical equipment matches the technical documentation. (Chap. 18.1)
   - Constant protective earthing system (Chap. 18.2)
   - Insulation resistance tests (Chap. 18.3)
   - Voltage tests (Chap. 18.4)
   - Protection from residual voltages (Chap. 18.5)
   - Function tests (Chap. 18.6)

   The functions of the electrical equipment, especially those which are related to safety and protective measures, were tested.

4 General Notes on Hazards

4.1 Hazards

The safety systems in these operating instructions and safety instructions must be observed. During operation, the control is done by using the control elements.
Keep the area around the shielding cabin, as well as the interior of the cabin, free of loose objects. in order to allow unhindered access at all times.

	DANGER *During maintenance and repairs, pay close attention to **hazards from electrical current!***
	DANGER *In the event that the ventilation system fails, be alert to the possible **danger of suffocation.***
	DANGER *Pay attention to **tripping hazards** between the edge of the entrance door of the shielding cabin and the floor of the building.*
	CAUTION *It is possible to walk on the ceiling of the shielding cabin. The load capacity must be checked.*

4.2 Hazardous Areas on the Shielding Cabin

The entire area around and in the shielding cabin is accessible to the operator.

The unit is operated by pressing the control elements on the exterior and interior of the shielding cabin as well as at the compressed air feed.

The hazardous areas for maintenance and repairs are located near the cabin.

When completing the equipping, maintenance and repair work, the area around the shielding cabin and/or the individual shielding cabin components are **hazardous areas** and may only be accessed by specialists who are observing the applicable safety regulations.

	WARNING
	*The **hazardous area** extends in the case of equipping, maintenance or repairs 1 m (min. 0.60 m) around the shielding cabin. The swing range of the opening doors of the switching cabinets must be taken into account.* *The operator must make sure that it is not possible to enter the **hazardous area** during the movements.*

4.3 Operation and Maintenance Personnel

Operation and maintenance personnel are persons who are responsible for the transportation, assembly, installation, and cleaning of the shielding cabin and for troubleshooting.

1. The shielding cabin may only be operated by trained and authorised personnel.
2. The operator must refrain from operating the cabin in any way that compromises the safety of the shielding cabin.
3. The operator must make sure that only authorised persons work on the shielding cabin.
4. The operator is obligated to report immediately any changes in the shielding cabin that occur and could compromise the safety of the cabin to the owner-operator.
5. The operator is obligated to operate the shielding cabin always and only in a perfect condition.
6. The operating personal must be provided with the appropriate personal protection for the material being machined, as defined in legal regulations.
7. The operator must regularly enforce and inspect the use of personal protective gear.

	NOTE
	*The operator is required to inform all persons concerning the restricted space. (**claustrophobia).***

4.4 Installation of Replacement Parts and Parts Subject to Wear

We expressly remind you that replacement parts and accessories that are not supplied by us are not tested or approved by us, either. The installation and/or use of such products can therefore have a negative impact on the properties of your shielding cabin that are attributable to the construction.
VACUUMSCHMELZE GmbH & Co. KG is excluded from any liability for damages resulting from the use of non-original parts and non-original accessories.
Normed parts can be purchased through specialty shops.

	NOTE
	Parts lists *and* ***technical datasheets*** *are included as insets in the technical documentation.*

	NOTE
	Lists of replacement parts *and* ***parts subject to wear*** *are included as inserts in the technical documentation.*

If needed, these parts can be obtained from
VACUUMSCHMELZE GmbH & Co. KG.

VACUUMSCHMELZE GmbH & Co. KG
Grüner Weg 37
D-63450 Hanau / Germany
Telephone: +49) 61 8138 – 0
Telefax: +49 61 81 38 26 45

4.5 Shut-Down Procedures

	DANGER *The shut-down procedure must be fully completed prior to any cleaning, maintenance or repairs (only by specialists).* *1. De-power the shielding cabin:* *- pull the power plug.* *- Make sure that there is no current flowing.* *- Short and earth the machine.* *- Secure the power plug against accidental re-insertion.* *2.1 During maintenance and repairs:* *- Make sure that there is no current flowing.* *- Cover and block off adjacent parts that are under current.* *2. Lock off pneumatics:* *- Close the maintenance unit and if necessary unplug the pneumatic coupling.* *- Check whether the shielding cabin is de-pressurised.* *- Secure the cut-of valve against re-opening.* *Close the open electrical cabinets during cleaning so that no water, steam or dust can enter. .* *Failure to heed this results in hazards to the life and limb of the personnel (life-threatening danger through excess voltage)!*
	In the case of necessary departures from the shut-down procedures, contact the manufacturer or only complete the tasks following the operational risk assessment.

5 Installation

5.1 Scope of Delivery

Fig. 5-1 Scope of delivery of the shielding cabin

The scope of delivery encompasses:

1 Shielding cabin including lighting (optional)
2 These operating instructions
3 Other technical documents

	NOTE
	The detailed scope of delivery can be read from the order confirmation.

5.2 Transportation and Packaging

Prior to the start of deliveries, the scope of delivery will be itemised. It will include information about:

- Delivery deadline,
- The number and type of transportation units.

The shielding cabin will be carefully tested and packaged before being shipped; however damage during transport cannot be excluded.

5.2.1 Delivery (also for replacement and exchange parts)

Inspection on receipt:

- Check the completeness based on the delivery note!

In the case of damages

- Check the shipment for damage (visual inspection)!

In the case of complaints

If the shipment was damaged during transport:

- Contact the last shipping company immediately!
- Keep the packaging material (for a possible inspection by the shipping company or for return shipping).

Packaging for return shipping

If possible use the original packaging and the original packing material.

If neither is on-hand any more:

- Ask for a packaging company with specialists.
- Set the transportations units on a pallet (they must be designed to handle the weight).
- In the case of questions that may come up regarding packaging and transportation insurance, please consult VACUUMSCHMELZE GmbH & Co. KG.

Packaging for transport with a lorry

In transportation with a lorry, the shielding cabin or the transport units are placed on transport pallets, fixed and secured with straps

5.2.2 Interim Storage

The freight packaging for the shielding cabin and the replacement and exchange parts is designed for a storage duration of 3 months from delivery.

	NOTE
	Place desiccants in the electrical devices.

Storage conditions

- see Chap. Technical Data.

	NOTE
	Never clean the electrical parts or shielding cabin parts with a steam jet or power sprayer. Dirt and water can cause considerable damage in the shielding cabin.

5.3 Transport to the Installation Site (from customer)

	NOTE
	Transportation may only be carried out by trained specialists taking into consideration of the transport instructions and the local conditions.

The transport units will be transported to the installation site by the customer in several boxes that must be lifted from the lorry or out of the container. In order to do this, a forklift must be used – preferably with fork extensions of 1.8 m – on the site.

Unloading the containers is allowed only on request from our field service. This makes sure that the field service personnel are responsible for unloading the container and transportation of the parts into the building. The containers will be unloaded within one, two days at most.
We appreciate it when customer employees help with unloading.
In addition to the cabin-components, a second shipment contains the installation tools and measurement devices for end-testing.

The tool boxes either come from our locations in the matching country or directly from our central location in Germany. They will be shipped back once installation is concluded.
An area – preferably in the Receiving Department – must be prepared to for unloading the boxes while the cabin is being installed.
After unpacking, we can transport the parts to the assembly site in smaller units.
It is desirable to have at your disposal a lift truck and a flat truck from the receiving department.

Free access for the components of the shielded room must be assured from the unloading area to the cabinet set-up site.

The cabin-elements can be transported in any alignment (vertical / horizontal), that provides easy access.
For the entire distance, a minimum vertical clearance of 2.00 m and a width of 1.00 m are required for the entire route, including all doorways.

Nevertheless there can be circumstances that hinder the transport inside the building.
Please take a look at the following in order to give you an idea of what we have to deal with:

- Our longest components are 3.5 metre long (I-shaped parts of the frame)
- Our heaviest part weighs around 100 kg (doors)
- Our largest MUMETALL® plates are about 1.8 x 1.8 metres in size (they are mounted on press boards that make it possible to transport them in an upright position).

With reference to these points, please avoid

- Stairs
- Narrow hallways
- Tight curves
- Ramps.

An installation area of at least 30 m² is needed for the temporary storage of the necessary parts, beyond the actual installation site.

Transport with crane

- The crane and the slinging equipment must be rated for the weights involved. The operator must have the crane and slinging equipment regularly inspected by an expert.
- The operator (> 18 years) must be trained in crane operation and must be named in writing.

- Sling the transport units on the crane with the appropriate slinging equipment (e.g. traverse, belt, multi-point suspension gear, ropes), using the lifting points and transport them. Do not stand under the load!
- When transporting the unit use any lifting eyes that may be on the transport unit and follow the instructions for transport.

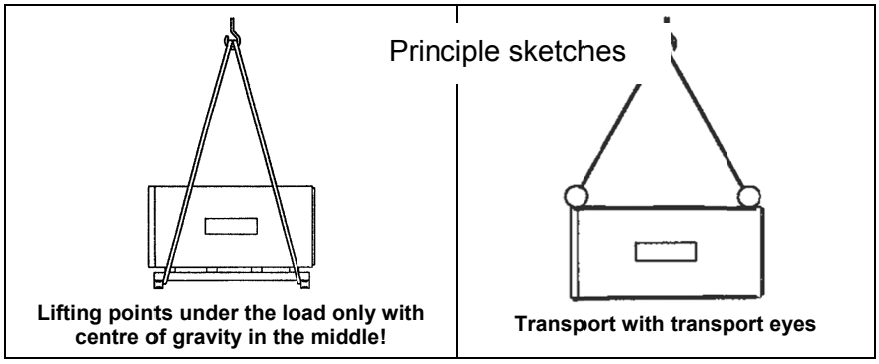

Fig. 5-2 Transport with crane

Transport with forklift or pallet truck

- the forklift / pallet truck must be rated for the weight of the transport unit. The operator must have it regularly tested by a specialist.
- The driver (> 18 years) must be trained in driving a forklift and be named in writing.
- Drive with the forks of the forklift between the rails of the transport pallet and/or the transport unit. Make sure that the forks of the forklift are inserted far enough (the forks must extend beyond the other side).
- Lift the transport unit paying special attention to the centre of gravity and transport them.

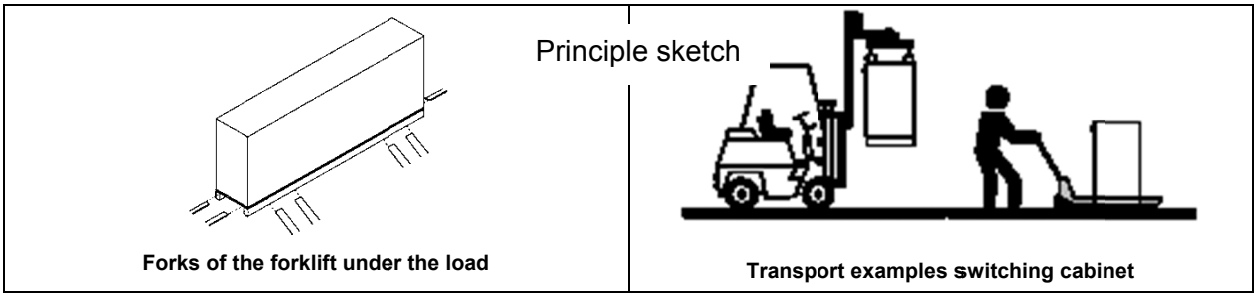

Fig. 5-3 Transport with forklift

5.3.1 Technical Information for Transport

WARNING

*During transportation, pay careful attention to the **weight**, the **lifting points** and the **centre of gravity** of the **transport unit** (see Tab. 3). The transportation unit can tip during transport. Pay attention to the **centre of gravity**. If necessary secure the transportation unit for transport with the appropriate **slinging equipment.***

*When **transporting the shielding cabin, you** must take into account the possible tipping of the parts of the shielding cabin when considering the need for space (height of components).*

The dimensions of the boxes for the main components are listed in the following.

Assembly group / Transportation unit	L [m]	W [m]	H [m]	Centre of gravity	Weight [kg]	Lifting equipment
Support frame	3.50	1.10	1.59	middle	ca. 1,500	by VAC-Specialists
Aluminium shell	3.07	1.10	1.59	middle	ca. 1,500	by VAC-Specialists
MUMETALL-sheets	1.87	1.87	1.59	middle	ca. 2,200	by VAC-Specialists
MUMETALL-sheets	1.67	1.67	1.59	middle	ca. 2,500	by VAC-Specialists
MUMETALL-corner pieces	3.07	0.57	0.74	middle	ca. 900	by VAC-Specialists
Door and wood floor	3.07	1.62	1.59	middle	ca. 1,200	by VAC-Specialists

Tab. 3 Dimensions and weights of the transportation units

Assembly can only be started following the inspection of the building data according to the floor loading plan!

Set-Up, Assembly, Commissioning

Set-up, assembly and commissioning may only be carried out by specialists from VACUUMSCHMELZE GmbH & Co. KG, who must be trained for this work.

- Based on the building's data, check whether it is capable of bearing the load of the machine.
  A floor plan which includes all relevant information is included in the technical documentation.
  The total load of the cabin is 7.2 t. The floor area of the shielding cabin includes 30 loading points, whereby one must assume that the support frame will react as mechanically flexible. This means, a traverse, which leads downward in the wall, is, from a mathematical approach, responsible for taking both the load of the area of the wall and the half area of the floor.
- Set-up and installation of the shielding cabin will be completed by VACUUMSCHMELZE GmbH & Co. KG.
- Check whether suitable electrical outlets as defined in Chapter 2.3.3 are present.
- Commission the shielding cabin taking into account the information from Chapter 7.

		NOTE
		Check to make sure that all components in the electrical system are firmly mounted. Tighten all screws and clamps (lighting, switching cabinets, motor, etc.). The interfaces are shown in Chapter 3.3 of these operating instructions.

- Carry out the operational start-up under due consideration of the information from Chapter 6.

6 Schematic Diagram

6.1 Construction of the Shielding Cabin

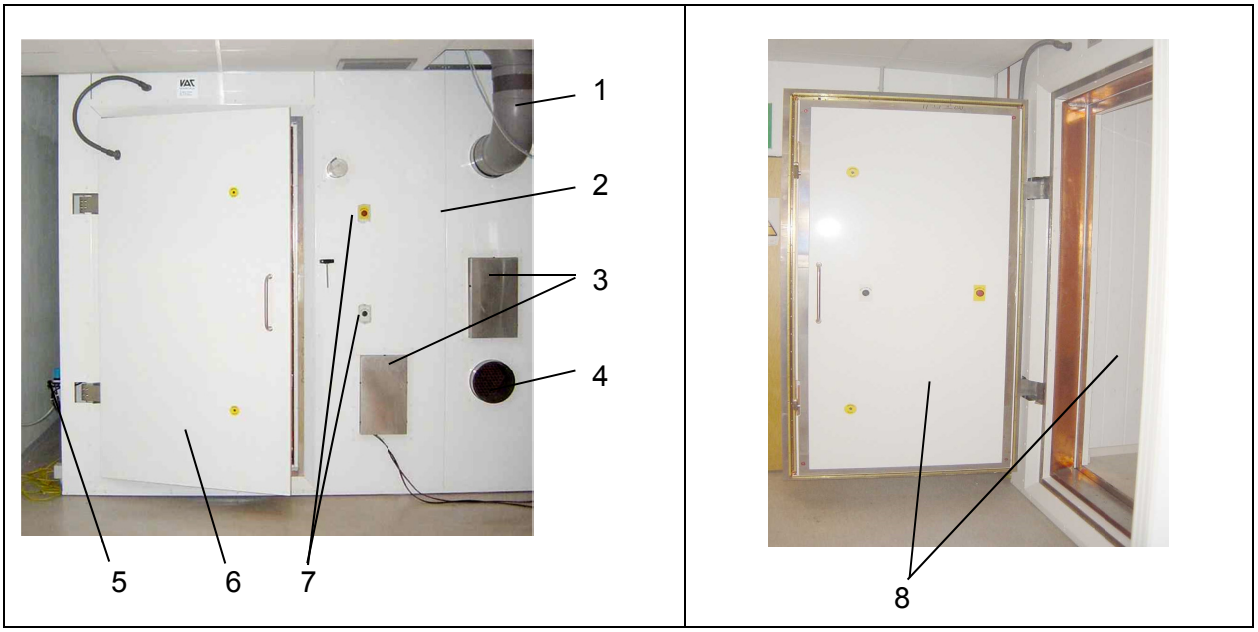

Fig. 6-1 Overview of the Shielding Cabin

The shielding cabin consists of the following main components:			
1	Fresh air intake	6	Access door with pneumatic locking and unlocking mechanism
2	Cabin frame with aluminium shell and shielding walls of MUMETALL, insulation and exterior cladding	7	Locking/unlocking switch and emergency stop button
3	Feed-through (optional)	8	Interior cladding
4	Exhaust outlet	9	Electrical installation and control/emergency equipment for lighting and door (not shown in image)
5	Pneumatic connection	10	Lighting (optional)

Construction and Function

The shielding cabin serves to eliminate and reducing magnetic interference in order to measure weak magnetic fields inside the cabin.

The shielding cabin fulfils the purpose largely by eliminating interference from other magnetic or electro-magnetic fields which can compromise the measurement results.

- The shielding cabin consists of a cabin frame with an aluminium shell and shielding walls made of MUMETALL, insulation and exterior cladding and test coils.

(Optional)

- The individual cabin components and/or elements are assembled on-site for the entire cabin as well as the cabin door (clear width 1 m, clear height 2 m) with the closing and opening mechanisms mounted and installed. In front of the cabin door, a drive-up ramp is installed, so that a patient in a wheelchair or gurney can be safely wheeled into the shielding cabin.

- The air supply and/or air conditioning is supplied with fresh air from the central air conditioning unit via feeder pipe line, which feeds air into the shielding cabin and it then escapes through an exhaust vent which is equipped with a filter. The effect of the filter causes a slight excess pressure in the room. The flow-through must be set so that the cabin air is replaced at least 2 to 3 times per hour.

- The shielding cabin is equipped with interior lighting, an emergency lighting system as well as an emergency opening system for the cabin door.

- Once the cabin is set-up, the shielding factor will be measured. Prior to measurement, make sure that materials are de-magnetised.

	WARNING
	Once de-magnetising is completed, do not bring any ferromagnetic components into the cabin. Otherwise it may become necessary to repeat the de-magnetising procedure. Mounting accessory components must be arranged so that the MUMETALL is not subjected to mechanical forces. *Insulate conductive components with insulating bushings in the direction of the aluminium shell in order to prevent an antenna effect.*

6.2 Shielding

- The magnetic field can be compensated for both passively (pure magnetic shielding made of MUMETALL) as well as actively (running current through a coil system).

6.3 Pneumatic Switching

- The pneumatic switching system is constructed so that the door automatically unlocks if there is a loss of air pressure or if the pressure is interrupted internally and the door can be opened as in the emergency stop procedure. In addition to the pneumatic unlocking, the door is equipped with a mechanical emergency unlocking mechanism which offers egress if the locking rods should block the door.

- The input pressure must not exceed 10 bar, otherwise damage to the pressure reducer may occur. The system pressure must be set in a range from 6 to 8 bar (manometer reading on the pressure reducer).

- Opening and locking the door itself is done by hand. Only locking the door uses the pneumatic system.

7 Operation

	CAUTION
	The shielding cabin may only be operated by specialists who are qualified and trained in its operation.

	NOTE
	*Prior to the start of production, make sure that there is **no one** in the danger zone and that there are **no objects** (e.g. tools, residual materials, etc.) in the shielding cabin.*

7.1 Opening and Closing the Door

- On both the interior and exterior side of the cabin there is a button installed with the label “OPEN / CLOSE DOOR”. The pneumatic closing process begins once the position indictor of the door is actuated by the switching cam and at the button mentioned above is actuated at the same time. Once the closing procedure is started, one can release the “OPEN / CLOSE DOOR” button. Independent of the status of the pneumatic switch, it can be necessary to press the button mentioned above twice to start the unlocking procedure.

- The buttons are positioned so that the operator can see into the gap in the door and can therefore exclude hazards to third parties.

- The normal opening procedure is triggered by pressing an “OPEN/CLOSE DOOR” button a second time. This re-routes the compressed air so that the door opens about 50 mm wide. One then opens it the rest of the way manually to an opening angle of 90 °.

- In exceptional cases, one can also disable the switching by pressing one of the two emergency stop buttons. The unit is evacuated and the door is opened automatically in part by a pre-tensioned spring assembly. The rest of the opening movement is accomplished by manually pushing. Then the emergency stop button must be unlocked.

7.2 Mechanical Emergency Release

- The mechanical emergency release is provided for the event that the locking bars are blocked in the door, in spite of actuating the “EMERGENCY / DOOR RELEASE” switch.

		CAUTION
	Should this type of fault occur, you must have the door repaired in consultation with Vacuumschmelze GmbH & Co. KG before using it again.	

- For the mechanical emergency release, two Allen wrenches are affixed to the cabin (one each on the interior and exterior).

- The door locking system consists essentially of a rolling lever which locks into a catch fastened on the cabin. The rolling lever itself is mounted on a sliding axis that is held in position against a pre-tensioned spring by a valve.

- To release the lock mechanically, one of the two Allen wrenches must be inserted in the valve’s gear (marked in yellow “EMERGENCY UNLOCK”). To reach the gear, there are 2 bore holes each in the interior and exterior of the claddings that are marked with a sticker that says “EMERGENCY UNLOCK”. By turning the Allen wrench in the correct direction the valve is raised and releases the axis subject to the spring tension. This is withdrawn into the door and releases the catch. Before emergency releasing, one needs to press the button “EMERGENCY / DOOR RELEASE”.

- The door can only be lifted up manually. Pulling it out requires a bit more strength since the friction between the HF-contact surfaces has to be overcome.

- To return the rolling lever to the correct position, the rolling lever must be pulled up out of the door, which causes the valve to drop down on its own weight and keeps the rolling lever in its correct position.

7.3 Lighting

The shielding cabin is equipped with a dimmable power supply. This operates a total of six low-voltage halogen lamps, three are installed on each side wall of the cabin.
In the event of a failure of the power supply, the system switches to the emergency lighting mode. This effect can also be simulated by separating the power supply from the power supply (pull the power plug) while the lamps are on.

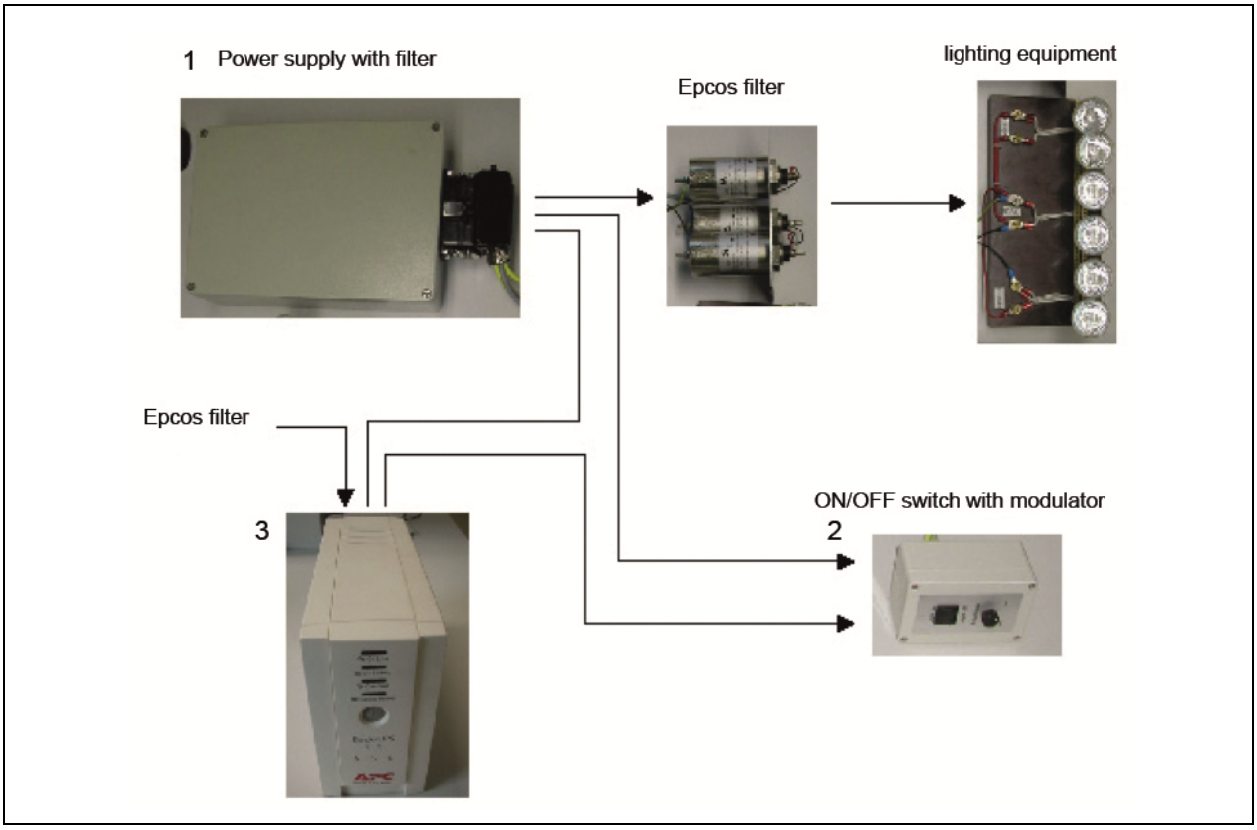

Fig. 7-1 Front side

1 **Power supply**
2 **Control element**
   a. **On /Off** (rocker switch)
      Pushing it switches the lighting on/off.
   b. **Brightness** (potentiometer)
      Pressing the potentiometer can continuously increase or decrease the brightness of the lighting.

Uninterruptable Power Supply (UPS)
If the power supply fails, the UPS for the emergency lighting switches over to the emergency battery automatically.

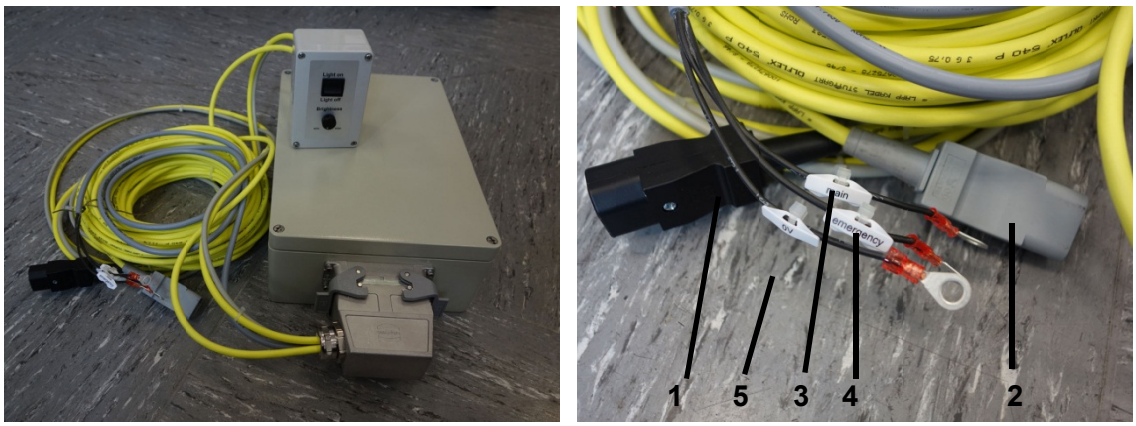

Fig. 7-2 Connection

1 **Main power connection** (black plug)
Through this connection one plugs the main power line to the UPS (UPS-bushing, black “BATTERY BACK UP”).

2 **Main power connection for recognising emergency lighting** (grey plug)
Through this connection one plugs the line in to the UPS (UPS-bushing “SURGE ONLY”). In the event of a power failure, only a part of the lighting will be supplied with voltage.

3 **Connecting line “MAIN”**
This line is the connection for the main cabin lighting. .

4 **Connecting line “EMERGENCY”**
This line provides the connection for the emergency lighting. This connection provides power to the halogen lights as well as the main lighting, as well as the emergency lighting if the power supply fails.

5 **Connecting line “0V”**
This line is the joint connection for all illumination.

7.4 Machine Equipment

		NOTE
		When equipping the shielding cabin, the relevant notes in the manufacturer's operating instructions are to be heeded for the devices and equipment that are used in and on the shielding cabin.

When equipping the shielding cabin proceed as follows:

- Make sure all electrical plug connections between the emergency cabin lighting and the shielding cabinet are secure.
- Check whether the batteries for the emergency lighting are ready for operation.
- Open the compressed air connection and test the door locking mechanism.

8 Maintenance / Cleaning / Inspection Interval–Function Test

WARNING

*The **chapter Maintenance / Cleaning / Inspection Interval Tests** is intended for:*

- *Maintenance and repairs / inspection interval–tests which may only be completed by specialists.*
- *Cleaning may only be completed by instructed persons.*

Specialist
Defined as a person with suitable training, adequate training and experience who is able to recognise risks and avoid hazards.
The definition is based on EN 60204-1:2006.

NOTE

The content and structure of these maintenance instructions were based on DIN 31 052 „Maintenance“.

WARNING

The operations and maintenance personnel will be trained at the installation location for the shielding cabin by specialists from VACUUMSCHMELZE GmbH & Co. KG. Should there be questions or areas that are unclear, please contact VACUUMSCHMELZE GmbH & Co. KG .

To make a smooth operation of the shielding cabin possible, it is absolutely necessary to clean and maintain the shielding cabin at regular intervals.

DANGER

Crushing, danger of injury to hands
*When conducting maintenance and repairs be alert to **crushing hazards!***

	DANGER *When conducting maintenance and repairs be alert to **dangers from electrical current!***

	NOTE *The shielding cabin has an average operational lifetime of 10 years. Then a general overhaul by a specialised company is required.*

	NOTE *Maintenance / cleaning instructions for individual externally purchased components are found in their separate manufacturer's operating instructions.*

	NOTE *The time listings are based on (single-shift operation) of 8 hours/day at 21 days/month, 12 months/year:* **s** = per shift; **e** = daily; ¼ **y**= quarterly; **w** = weekly; ½ **y** = semi-annually; **m** = monthly; **y** = annually; **C** = commissioning; **4 y** = every 4 years; **MI** = follow the manufacturer's operating instructions .

Tab. 4 Test intervals (abbreviations)

	DANGER *The **shut-down procedures** must be fully completed prior to cleaning, maintenance and repairs (see Chap. 4.5)!*

8.1 Maintenance

8.1.1 General Maintenance Notes

The shielding cabin itself is largely maintenance free.
However, the following maintenance is required:

Checks	Interval
Check the ease of motion in the door elements and the emergency release.	**m**
Check the functionality of the electrical lines, switches, lighting as well as the emergency lighting.	**m**
Check the contact springs in the doors for possible breakage.	**w**
Check the function of the ventilation unit regularly (recommendation). .	**m**
Check component assembly groups with their own CE-labels.	**MI**
Check the hose lines and their connectors	**y**

Tab. 5 Intervals for checks

8.1.2 Door Area

Interval: 3 months
Component: door contacts
Maintenance: cleaning with solvents.

	NOTE
	Frequent use of the door or external forces (e.g. earthquakes) can cause subsidence in the door

Subsidence in the door generally makes itself known when the pre-set closing pressure of 4 - 8 bars is no longer adequate to completely lock the door. Another indication can be excessive wear on the copper plating on the contact sensors in one place (slight marks on the springs on the sensor are normal).

	WARNING
	Should there be indications that the door has subsided, it is urgently recommended that one check the door position, since otherwise the copper plating can be completely worn off. This necessarily leads to a loss of hydraulic fluid. Please contact VACUUMSCHMELZE GmbH & Co. KG in such cases so that the door can be re-adjusted and further damage prevented.

8.1.3 Escaping Air

The filter in the air vent in the shielding cabin must be cleaned regularly (corresponding to in-house specifications and taking the operating hours completed into account) and if needed, checked for fouling.

8.1.4 Pneumatic connection

The compressed air supply must be regularly checked for leakage. Make sure that the screw connections are tightened. The unit's filters must be regularly cleaned or replaced. Check the air pressure on the manometer of the maintenance unit or re-set it.

	NOTE
	The cleaning, maintenance and repair of component assembly groups with their own CE–labels are to be completed based on the manufacturer's operating instructions. They are a component of the technical documentation and included with it.

8.2 Cleaning

To assure smooth operation of the shielding cabin, it must be thoroughly and regularly cleaned.

Cleaning	Interval
Keep the entire area around the shielding cabin and the interior of the shielding cabin clean (observe hygiene requirements).	**d**
Dispose of all cleaning wastes and cleaning materials in compliance with environmental regulations.	

Tab. 6 Intervals for cleaning

WARNING

In selecting cleaning agents and carrying out cleaning, the specification for medical institutions as well as the relevant regulatory provisions governing hygiene must be paid special attention.
Commensurate specifications must be provided in the in-house cleaning schedules.

NOTE

Make sure that there are no cleaning materials, etc. left behind in the shielding cabin when cleaning is finished.

8.3 Inspection Interval–Function Test

Assembly Group	Interval (single-shift operation)					
Normal function tests:	**d**	**w**	**m**	**½ y**	**1 y**	**MI**
Switch, lighting and emergency-lighting on the controls.			X			
Labels, warnings, & yellow/black – markings present and legible (visual inspection).					X	
Check all plug, threaded and clamp connections for correct fit, tighten if necessary: 1. Feeder lines 2. Batteries 3. Earthing connections					X	
Check the closing mechanism for loose connections				X		
Specialised safety – tests:	**d**	**w**	**m**	**½ y**	**1 y**	**MI**
Visual inspection of the safety switch and the cable lines (cable conduit, hoses) on the shielding cabin.		X				
Visual inspection of cable lines		X				

Tab. 7 Inspection interval – function tests

8.4 Warnings on the Shielding Cabin

The following warnings are posted on the shielding cabin when it is delivered:

Warning	Position / location on the shielding cabin
	• Interior and exterior side of the cabin door
	• Interior and exterior side of the cabin door
	• Interior and exterior cabin door

Tab. 8 Warnings on the shielding cabin

These must be checked at regular intervals (see Chap. 8.3).

8.5 Checks on the Shielding Cabin

Once repairs are completed and the contact springs replaced:

1. Perform a visual inspection in the shielding cabin.
   Check the covers and insulators for damage

,

2. Check the completeness of any repairs done.

If all functions and normal, the **shielding cabin is handed over** to the operator.

8.6 Replacement Parts-List

- Replacement parts list: You can basically get all of the replacement parts from us, but the DIN-parts like screws, bearings, etc. can also be purchased from the corresponding specialised suppliers.
- VACUUMSCHMELZE GmbH & Co. KG **provides a supplier's guarantee for ....years** for the replacement parts mentioned above.
- Information in orders for replacement parts/ queries about replacement parts: If needed contact VACUUMSCHMELZE.

- To: VACUUMSCHMELZE GmbH & Co. KG
  Fax: +49 61 81 38 26 45
  E-mail:info@vacuumschmelze.com

from: Company: _____
Name:_____
Fax: _____
Email: _____

8.6.1 Malfunction, Cause, Correction

	DANGER
	The facts and notes concerning "malfunction, cause and correction" are presented so that they can be understood by persons with professional training (see the definition in Chap. 3.4 "Safety Measures") in *- Electrical / Electronic Engineering.* *These personnel must be provided with appropriate tools and testing equipment.* *Before doing any maintenance or repairs, the shielding cabin must be fully disconnected from the power supply or secured. If the measures indicated do not solve the problem, contact VACUUMSCHMELZE GmbH & Co. KG.*

Malfunction	Cause	Correction
Door does not lock.	Emergency stop button actuated inside or out.	Identify and remove cause, unlock emergency stop button.
	No compressed air present.	Check the external compressed air supply and restore the supply.
	Door not in "locking position".	Check the position of the door. The door must be brought into locking position.
	Door has subsided; trip valve on the top of the door does not trip.	Contact Vacuumschmelze
Door opens and closes at intervals.	Leak in one of the control valves.	Contact Vacuumschmelze
Door opens by itself.	Leak in one of the control valves or hose	Contact Vacuumschmelze
	Compressed air supply interrupted	Check the compressed air connection
Lamps do not come on.	Light not turned on.	Switch on the light at the control unit for the power supply (black rocker switch).

	Power supply has no power. Other	Check the fitting of the plug connectors. Contact Vacuumschmelze
Emergency lighting does not function.	Light shuts off. Plug for emergency lighting not plugged in. Buffer battery deeply discharged.	Turn on the lamps Insert the connector plug. See operating instructions for the uninterruptable power supply (UPS).

	NOTE
	Other information about “malfunctions, cause and correction” is given in the separate manufacturer–operating instructions.

9 Emergency

In an emergency, press the **emergency stop button** on the inside or the outside of the shielding cabin and if necessary actuate the emergency release of the cabin door.

Pull all power plugs out of the electrical outlets.

The emergency stop buttons can be unlocked either by pulling them or turning them to the right.

10 Disassembly / Disposal

Disassembly
Disassembly may only be carried out by specialists from VACUUMSCHMELZE GmbH & Co. KG. Make sure that the power supply is completely shut down and/or disconnected before starting and disassembly procedures.

Disposal
The shielding cabin consists of about 3.8 t of MUMETALL which is a nickel-iron-based alloy, about 2.5 t of aluminium in various degrees of purity ($AlMg_3$ as extruded profile, Al 99.9 as pure aluminium for the copper-plated aluminium sheets), electrically conductive components made of pure copper, small proportions of plastics in the pipe ducts or external sheaths for pipe ducts, wood and wood-like components such as the MDF–panelling on the walls and floor of the interior cabin, around 12 m^2 PVC, 4 mm thick, in the form of conductive floor covering, around 3 m^3 styropor from the walls, as well as various stainless steel screws and door hinges.

Solvents and cleaning agents must be disposed of in compliance with local regulations and in conformity with the instructions from the material safety data sheets supplied by the manufacturer.

Contaminated cleanings tools (brushes, rags, etc.) must also be disposed of in conformity with the manufacturer's instructions.

Battery-Disposal

11 Batteries do not belong in household waste. As a consumer, you are obligated under the law to return used batteries. You can dispose of your used batteries at any of the collection sites in your community or any place where batteries of this type are sold. Index

B

Built-in safety systems 19

C

Centres of gravity 36
Checks on the shielding cabin 52
Cleaning 46, 50
Complaints 32
Connections 24
Content 3
Control 41
Control area 27
Copyright 2
Crushing hazards to hands 46

D

Damage 32
Danger zones on the shielding cabin 27
Declaration of conformity 6
De-powering shielding cabin 30
Designation 6
Dimensions and weight 10
Disassembly 55
Disconnector switch 19
Disposal 55
Door area 48

E

Earthing 20
Ecolabel 17
Emergency-stop-system / emergency release 19
Emergency lighting 20
Emergency 55
Equipping the machine 45
Explanation of safety symbols used 17

F

Foundation loading 14

G

General data 14
General hazard warnings 26
General maintenance instructions 48

H

Hazards 26
Hazards from electrical current 26, 46
Hazard warnings 50

I

Inspection intervals-function tests 51
Installation 31
Installing replacement and wearable parts 29
Inspection of incoming goods 32
Interfaces on the shielding cabin 21
Interim storage 33

L

Lighting 42
Lighting strength 24
List of illustrations 5
List of tables 5

M

Maintenance 46, 48
Malfunction, cause, correction 53
Mechanical emergency release 20, 42

N

Note on operating instructions 2, 20
Notes and explanations 16

O

Obligations of the operator 23
Opening and closing the door 41
Operations and maintenance personnel.....20, 28
Operating instructions binding..... 16
Operating permit 23
Overview of the unit..... 8
Overview and proper use 8

P

Packaging 32
Packaging for return shipping 32
Packaging for transport with a lorry 32
Power supply..... 13
Pneumatics..... 13
Pneumatic connection 49
Pneumatic switching 40
Product-spezific data..... 10
Proper use 9

R

Replacement parts-list 52

S

Safety equipment 22
Safety 16
Safety tests..... 25
Safety instructions..... 24
Scope of delivery..... 31
Set-up plan 38
Set-up, assembly, commissioning 37
Shielding 40
Shielding cabin labelling.....18
Shut-down procedure 30
Slinging equipment 36
Space requirement.....10
Specialist.....22, 46
Storage conditions 14, 33
Structure of the shielding cabin.....38

T

Table of contents 3
Technical information for transport 35
Technical data.....10
Test intervals.....19
Test methods.....19
Trained person 22
Transport 32
Transport to installation site.....33
Transport with a crane.....34
Transport with a forklift.....35
Transport with a crane.....34

U

Uninterrupted power supply 43

W

Warnings on the shielding cabin.....51
Warning 30, 53
Working temperature range 14