PRICE LIST

2025

PASTRY EQUIPMENTS

Z.MATIK
DOUGH LOVERS

CODE: LISTINO_EN

REV.00

DATE: 01/01/2025

SHB

TABLE TOP SHEETER

Practical and innovative table top dough sheeter with manual lever control, non-removable decks and shockproof ABS motor casing. 80 diameter cylinders with opening from 0.1 to 40 mm. Available in the 400V 50HZ 3PH version; for special voltages please contact our sales office.

SHB50B050	*DIMENSIONS 500X500 MM*	*€ 5.422,00*
SHB50B075	*DIMENSIONS 500X750 MM*	*€ 5.422,00*
SHB50B100	*DIMENSIONS 500X1000 MM*	*€ 5.422,00*
SHB60B100	*DIMENSIONS 600X1000 MM*	*€ 5.540,00*

SHB

TABLE TOP SHEETER WITH BASE

New table top dough sheeter with base with manual lever control, non-extractable decks and shockproof ABS motor casing. 80 diameter cylinders with 0.1 to 40 mm opening and dough collection tray included. Available in the 400V 50HZ 3PH version; for special voltages please contact our sales office.

SHB50B075B	*DIMENSIONS 500X750 MM*	*€ 5.694,00*
SHB50B100B	*DIMENSIONS 500X1000 MM*	*€ 5.761,00*
SHB50B120B	*DIMENSIONS 500X1200 MM*	*€ 5.761,00*
SHB60B100B	*DIMENSIONS 600X1000 MM*	*€ 6.636,00*
SHB60B120B	*DIMENSIONS 600X1200 MM*	*€ 6.666,00*
SHB60B140B	*DIMENSIONS 600X1300 MM*	*€ 6.666,00*

SHE

FLOOR STANDING SHEETER

New dough sheeter with base with manual lever control, removable decks, dough collection tray included and metal casing. 80 diameter cylinders with opening from 0.1 to 50 mm. Available in the 400V 50HZ 3PH version; for special voltages please contact our sales office.

SHE50075	*DIMENSIONS 500X750 MM*	*€ 6.359,00*
SHE50100	*DIMENSIONS 500X1000 MM*	*€ 6.500,00*
SHE50120	*DIMENSIONS 500X1200 MM*	*€ 6.500,00*
SHE60100	*DIMENSIONS 600X1000 MM*	*€ 7.121,00*
SHE60120	*DIMENSIONS 600X1200 MM*	*€ 7.259,00*
SHE60140	*DIMENSIONS 600X1400 MM*	*€ 7.259,00*
SHE60160	*DIMENSIONS 600X1600 MM*	*€ 7.700,00*

SHE

SHE65140

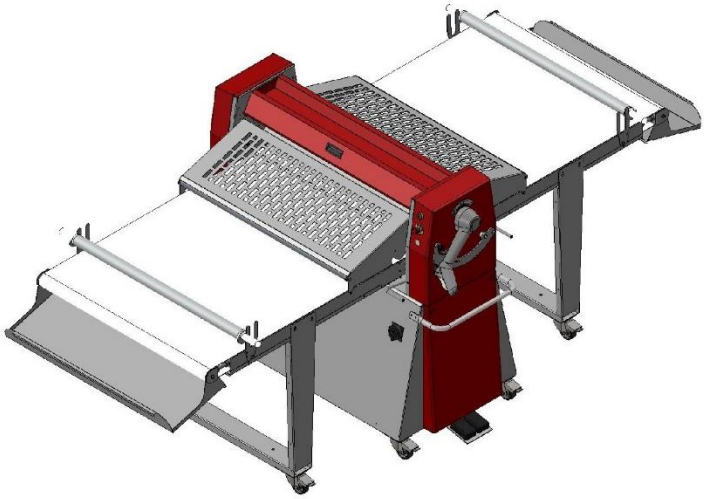

SHE100130

FLOOR STANDING SHEETER (WIDTH 650 / 1000 MM)

Floor standing Sheeter with manual lever control, removable decks, dough collection tray included and metal casing. 80 diameter cylinders with opening from 0.1 to 47 mm. It is not possible to put the SHE100130 and SHE65160 models in the rest position. Leg resting on the ground. Available in the 400V 50HZ 3PH version; for special voltages please contact our sales office.

SHE65140	*DIMENSIONS 650X1400 MM*	*€ 8.135,00*
SHE65160	*DIMENSIONS 650X1600 MM*	*€ 8.732,00*
SHE100130	*DIMENSIONS 1000X1300 MM*	*€ 11.112,00*

SHE

FLOOR STANDING SHEETER WITH CUTTING STATION

Floor standing sheeter with cutting station, manual lever control, removable decks, dough collection tray included and metal casing. 80 diameter cylinders with opening from 0.1 to 50 mm. Rollers excluded from the price. It is not possible to put the machine in the rest position. Available in the 230V 50HZ 1PH version with inverter; for special voltages please contact our sales office.

SHE6014DT	*DIMENSIONS 600X1400 MM*	*€ 9.811,00*
SHE6016DT	*DIMENSIONS 600X1600 MM*	*€ 11.031,00*

SHE6514DT	*DIMENSIONS 650X1400 MM*	*€ 11.639,00*
SHE6516DT	*DIMENSIONS 650X1600 MM*	*€ 13.132,00*

SHE-I

FLOOR STANDING SHEETER IN STAINLESS STEEL AISI 304

SHE stainless steel floor standing sheeter with manual lever control, removable decks, dough collection tray included. 80 diameter cylinders with opening from 0.1 to 50 mm. Available in the 400V 50HZ 3PH version; for special voltages please contact our sales office.

Also available in the version with cutting device, voltage 230V 50HZ 1PH with inverter. For this version, it is not possible to put the machine in rest position. Rollers excluded from the price.

SHE50075-I	*DIMENSIONS 500X750 MM*	*€ 8.868,00*
SHE50100-I	*DIMENSIONS 500X1000 MM*	*€ 9.164,00*
SHE50120-I	*DIMENSIONS 500X1200 MM*	*€ 9.164,00*
SHE60100-I	*DIMENSIONS 600X1000 MM*	*€ 10.010,00*
SHE60120-I	*DIMENSIONS 600X1200 MM*	*€ 10.208,00*
SHE60140-I	*DIMENSIONS 600X1400 MM*	*€ 10.208,00*

SHE6014DT-I	*DIMENSIONS 600X1400 MM*	*€ 12.823,00*
SHE6016DT-I	*DIMENSIONS 600X1600 MM*	*€ 13.518,00*

ACCESSORIES FOR MANUAL SHEETER

SET PEDALS (SHE)	€ 206,00
SET UNDERDECKS FOR FLOUR COLLECTION PAINTED (SHE)	€ 184,00
SET UNDERDECKS FOR FLOUR COLLECTION INOX (SHE)	€ 410,00
SET DOUGH COLLECTION TRAYS (ACCESSORY FOR BENCH SHEETER SHB)	€ 324,00
UL (APPLICATION OF UL COMPATIBLE COMPONENTS)	€ 566,00
TOTAL GREY PAINTING (IN THE BENCHTOP MODELS THE ENGINE COVER REMAINS RED)	€ 309,00

NB: The painted manual dough sheeters are supplied by default in grey and red.

ACCESSORIES FOR SHEETER WITH CUTTING STATION

RTT **	STANDARD TRIANGLE CUTTER (2 3 4 5 LINES) MINIATURE TRIANGLE CUTTER (6 LINES)		€ 2.032,00 € 2.167,00
RTD	DISK CUTTER MADE OF ACETALYC RESIN (disks included: maximum 6 pcs-depending on your necessity) DISKS (price each) made of acetylic resin		€ 1.281,00 € 83,00
RTR	ROUND CUTTER FROM 50 TO 70 MM ROUND CUTTER FROM 75 TO 300 MM		€ 2.338,00 € 2.095,00
RTTRA **	TRANSVERSAL CUTTER		€ 1.827,00
RTO	OVAL CUTTER		€ 2.520,00
RPP	DOUGH PUNCH		€ 1.794,00

RTDO	DONUT CUTTER		€ 4.574,00
ZTEFLON	TEFLON APPLICATION ON CUTTING ROLLERS * the price may vary depending on the size and shape of the mould, for more information contact our sales office.		€ 1.000,00
SPES.	THICKNESS DETECTOR picture 1: bench sheeter picture 2: sheeter with base	Picture 1 Picture 2	€ 522,00
ZSPUGNA	SPONGE APPLICATION (It is necessary for little shapes in order to avoid the dough sticks to the cutter) *no-food		€ 584,00
ZCALZA	FOOD CASING APPLICATION (STOCKING)		€ 14,00
2V	TWO SPEEDS ENGINE APPLICATION		€ 522,00
INV.2	INVERTER IN 230 VOLT APPLICATION 1PH FOR SHE-SHB		€ 522,00
INV.4	INVERTER IN 400 VOLT APPLICATION 3PH		€ 602,00

NB: In all forms, + 5% is calculated for the withdrawal of the paste. If you have any special needs, please inform the sales office.

NB: It is necessary to specify the measurements of the shape at the time of the order confirmation.

NB: All rollers are in AISI 304 stainless steel.

** NB: For some products, a pair of rollers is required instead of a single roll (for ex. triangles and transversal). For more information, please contact our sales office.

SFA

AUTOMATIC SHEETER

Sheeter with base with 7 "touch screen panel with 100 work programs, belt speed adjustable with inverter, manual / semiautomatic / automatic work system, automatic belt inversion, dough collection tray collection included, under-decks for flour collection, removable decks, rolling pins included. 80 diameter cylinders with opening from 1 to 50 mm. Flour duster and reel excluded. Available in the 400V 50HZ 3PH version; for special voltages please contact our sales office.

SF6514A	*DIMENSIONS 650X1400*	*€ 23.261,00*
SF6516A	*DIMENSIONS 650X1600*	*€ 25.652,00*
SF6520A	*DIMENSIONS 650X2000*	*€ 27.246,00*

ACCESSORIES FOR AUTOMATIC SHEETER

SFA650	*AUTOMATIC PAINTED FLOUR DUSTER* *(independent item which can be added later)*		*€ 3.323,00*
ARR50	*AUTOMATIC PAINTED WINDER* *(it rolls the dough when the latter reaches the desired thickness)*		*€ 3.987,00*
SF650ALT	*CUTTING STATION* *(adaptable to the corresponding model; it is not included in the machine; usable only with proper cutters.)*	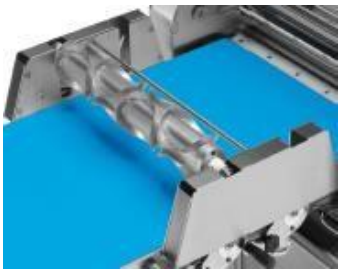	*€1.728,00*
TOUCH10	*TOUCH SCREEN PANEL 10"* *(ADDITIONAL COST IN RELATION TO THE PRICE OF THE MACHINE)*		*€ 1.545,00*
INOX	*STAINLESS STEEL VERSION* *(the machine is entirely made of stainless steel aisi 304.)*		*€ 2.736,00*
TEST	*TESTING AT YOUR SITE (NET PRICE)* *(outward journey + return, food and lodging excluded.)*		*€ 913,00*
ASSREM	*ROUTER FOR REMOTE ASSISTENCE* *(assistance hours excluded.)*		*€ 3.780,00*
UL	*APPLICATION OF UL COMPATIBLE COMPONENTS*		*€ 772,00*

ACCESSORIES FOR AUTOMATIC SHEETER WITH CUTTING STATION

RTT **	STANDARD TRIANGLE CUTTER (2 3 4 5 LINES) MINIATURE TRIANGLE CUTTER (6 LINES)		€ 2.032,00 € 2.167,00
RTD	DISK CUTTER MADE OF ACETALYC RESIN (disks included: maximum 6 pcs- depending on your necessity) DISKS (price each) made of acetylic resin		€ 1.281,00 € 83,00
RTR	ROUND CUTTER FROM 50 TO 70 MM ROUND CUTTER FROM 75 TO 300 MM		€ 2.338,00 € 2.095,00
RTTRA **	TRANSVERSAL CUTTER		€ 1.827,00
RTO	OVAL CUTTER		€ 2.520,00
RPP	DOUGH PUNCH	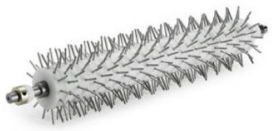	€ 1.794,00
RTDO	DONUT CUTTER		€ 4.574,00
ZTEFLON	TEFLON APPLICATION ON CUTTING ROLLERS * the price may vary depending on the size and shape of the mould, for more information contact our sales office.		€ 1.000,00
ZSPUGNA	SPONGE APPLICATION (It is necessary for little shapes in order to avoid the dough sticks to the cutter) *no-food		€ 584,00
ZCALZA	FOOD CASING APPLICATION (STOCKING)		€ 14,00

NB: In all forms, + 5% is calculated for the withdrawal of the paste. If you have any special needs, please inform the sales office.

NB: It is necessary to specify the measurements of the shape at the time of the order confirmation.

NB: All rollers are in AISI 304 stainless steel.

** NB: For some products, a pair of rollers is required instead of a single roll (for ex. triangles and transversal). For more information, please contact our sales office.

SF/MC SERIES

BENCH SHEETER WITHOUT BELTS

Bench sheeter with inclined planes; available in the 400V 50HZ 3PH version.

Additional accessories on request: trolley, mobile pedal, 230V 50HZ 1PH version.

SF500SP	*INCLINED TABLES*	*€ 4.245,00*

SHEETER FOR SWEET PASTE

Sheeter with manual control; available in the 230V 50HZ 1PH version.

ZMC30	*300 MM*	*€ 2.405,00*
ZMC40	*400 MM*	*€ 2.611,00*
ZMC60	*600 MM*	*€ 4.019,00*

GC

AUTOMATIC CROISSANT MACHINE

Croissant machine available both in the painted version and in the version with stainless steel paneling. It includes the calibrator, the croissant wrapping machine and a set of standard croissant rolls (b168 x h100 mm). Available with voltage 400V 50HZ 3PH; for special voltages please contact our sales office.

GC200	*FROM 840 TO 2500 PZ/H APPROXIMATELY*	*€ 33.452,00*
GC400	*FROM 1320 TO 4000 PZ/H APPROXIMATELY*	*€ 43.155,00*
GC200-I (INOX)	*FROM 840 TO 2500 PZ/H APPROXIMATELY*	*€ 35.015,00*
GC400-I (INOX)	*FROM 1320 TO 4000 PZ/H APPROXIMATELY*	*€ 44.721,00*

ACCESSORIES FOR AUTOMATIC CROISSANT MACHINE

BYPASS	MOTORIZED TABLE GC200/ GC400 PAINTED VERSION	 (plan for the output of the different shapes from the croissants)	€ 2.930,00
BYPASS	MOTORIZED TABLE GC200/ GC400 STAINLESS STEEL VERSION		€ 3.516,00
AVV200	PAINTED CROISSANT MOULDER 400V 50HZ 3PH		€ 7.082,00
AVV200-I	STAINLESS STEEL CROISSANT MOULDER (panels) 400V 50HZ 3PH		€ 7.839,00
AVV200-II	STAINLESS STEEL CROISSANT MOULDER (completely) 400V 50HZ 3PH		€ 8.984,00

RTT **	STANDARD TRIANGLE CUTTER (2 3 4 5 LINES) MINIATURE TRIANGLE CUTTER (6 LINES)		€ 2.301,00 € 2.416,00
RTD	DISK CUTTER MADE OF ACETALYC RESIN (disks included: maximum 6 pcs-depending on your necessity) DISKS (price each) made of acetylic resin		€ 1.524,00 € 83,00
RTR	ROUND CUTTER FROM 50 TO 70 MM ROUND CUTTER FROM 75 TO 300 MM		€ 2.633,00 € 2.347,00
RTTRA **	TRANSVERSAL CUTTER		€ 2.131,00
RTO	OVAL CUTTER		€ 2.617,00
RPP	DOUGH PUNCH	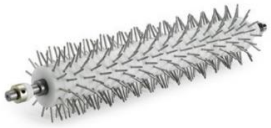	€ 2.063,00
RTDO	DONUT CUTTER		€ 4.665,00
ZTEFLON	TEFLON APPLICATION ON CUTTING ROLLERS * the price may vary depending on the size and shape of the mould, for more information contact our sales office.		€ 1.000,00
ZSPUGNA	SPONGE APPLICATION (It is necessary for little shapes in order to avoid the dough sticks to the cutter) *no-food		€ 584,00
ZCALZA	FOOD CASING APPLICATION (STOCKING)		€ 14,00
UL	APPLICATION OF UL COMPATIBLE COMPONENTS ON GC		€ 1.030,00
UL	APPLICATION OF UL COMPATIBLE COMPONENTS ON AVV		€ 515,00

NB: In all forms, + 5% is calculated for the withdrawal of the paste. If you have any special needs, please inform the sales office.

NB: It is necessary to specify the measurements of the shape at the time of the order confirmation.

NB: All rollers are in AISI 304 stainless steel.

** NB: For some products, a pair of rollers is required instead of a single roll (for ex. triangles and transversal). For more information, please contact our sales office.

TL-I

WORKING TABLE

Working table in stainless steel with cutting station, two trays supports, scraper for cleaning the carpet and pedal for the manual system. Lower support plate included (except for the TL200-I model). Available in the 230V 50HZ 1PH version with inverter (cost unchanged for the request for a 400V 50HZ 3PH mechanical variator on TL200-I).

TL200-I	*2 METERS*	*€ 12.798,00*
TL250-I	*2,5 METERS*	*€ 13.949,00*
TL300-I	*3 METERS*	*€ 15.043,00*
TL350-I	*3,5 METERS*	*€ 16.157,00*
TL400-I	*4 METERS*	*€ 16.947,00*
TL450-I	*4,5 METERS*	*€17.961,00*
TL500-I	*5 METERS*	*€ 19.779,00*
TL550-I	*5,5 METERS*	*€ 20.875,00*
TL600-I	*6 METERS*	*€ 21.991,00*

MINI LINE

MINI LINE

Working table in stainless steel with cutting station, two trays supports, scraper for cleaning the carpet and pedal for the manual system. Lower support plate included. Available in the 230V 50HZ 1PH version with inverter. Accessory included: guillottine with blade (Electric machine for table 600mm with electronically adjustable cutting lenght from min.10 mm up to the desired measure. Blade lifting: max. 100 mm. Number of beats: 70/min. Equipped by TIME CONTROL. Structure made of stainless steel and aluminium.)

MINILINE500	*5 METERS*	*€ 35.977,00*
MINILINE550	*5,5 METERS*	*€ 37.073,00*
MINILINE600	*6 METERS*	*€ 38.190,00*

ACCESSORIES FOR WORKING TABLE

RTT **	STANDARD TRIANGLE CUTTER (2 3 4 5 LINES) MINIATURE TRIANGLE CUTTER (6 LINES)		€ 2.032,00 € 2.167,00
RTD	DISK CUTTER MADE OF ACETALYC RESIN (disks included: maximum 6 pcs-depending on your necessity) DISKS (price each) made of acetylic resin		€ 1.281,00 € 83,00
RTR	ROUND CUTTER FROM 50 TO 70 MM ROUND CUTTER FROM 75 TO 300 MM		€ 2.338,00 € 2.095,00
RTTRA **	TRANSVERSAL CUTTER		€ 1.827,00
RTO	OVAL CUTTER		€ 2.520,00
RPP	DOUGH PUNCH	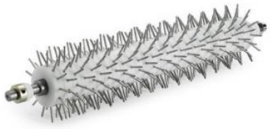	€ 1.794,00
RTDO	DONUT CUTTER		€ 4.574,00
ZTEFLON	TEFLON APPLICATION ON CUTTING ROLLERS * the price may vary depending on the size and shape of the mould, for more information contact our sales office.		€ 1.000,00
ZSPUGNA	SPONGE APPLICATION (It is necessary for little shapes in order to avoid the dough sticks to the cutter) *no-food		€ 584,00
ZCALZA	FOOD CASING APPLICATION (STOCKING)		€ 14,00
UL	APPLICATION OF UL COMPATIBLE COMPONENTS		€ 772,00

SFA600	AUTOMATIC STAINLESS STEEL FLOUR DUSTER		€ 4.270,00
SFRI.	DOUGH WASTE COLLECTOR AND TRASPORTER		€ 4.633,00
DSFRI.	DOUBLE DOUGH WASTE COLLECTOR AND TRASPORTER		€ 8.469,00
ZCL600-I	STAINLESS STEEL CALIBRATOR It gives to the dough the same weight; cylinders Ø 100 opening 01-13 mm; available in the 400V 50HZ 3PH and 230V 50HZ 1PH versions (the price is to be considered valid for both voltages).		€ 17.364,00
ZRIEMP	DOSING FILLING MACHINE FOR CHOCOLATE OR HONEY (control by pedal and dosing gun included, stainless steel, 400V 50HZ 3PH)		€ 8.469,00
ZRIEMP	DOSING FILLING MACHINE FOR CREAM OR JAM (control by dosing gun included, painted, 400V 50HZ 3PH)		€ 6.515,00

NB: In all forms, + 5% is calculated for the withdrawal of the paste. If you have any special needs, please inform the sales office.

NB: It is necessary to specify the measurements of the shape at the time of the order confirmation.

NB: All rollers are in AISI 304 stainless steel.

** NB: For some products, a pair of rollers is required instead of a single roll (for ex. triangles and transversal). For more information, please contact our sales office.

ZPL SERIES

ZPL7

ZPL203

ZPL12

PLANETARY MIXER ZPL SERIES

Benchtop planetary mixer with electronic variator. Machine complete with three tools: whisk, spatula and hook. Available in the 220V 50HZ 1PH version.

ZPL7	*6,8 LITERS*	*€ 1.525,00*
ZPL12	*12 LITERS*	*€ 3.646,00*
ZPL203B	*20 LITERS*	*€ 5.490,00*

* For the ZPL203B model it is possible to request the appropriate pedestal with additional cost.

ZEUS

ZEUS40

ZEUS60

ZEUS80

PLANETARY MIXER ZEUS SERIES

Planetary mixer complete with three tools: spatula, whisk and hook (please refer if you want the fine wire or coarse wire whisk). Available with voltage 400V 50HZ 3PH in both versions (with inverter and three-speed).

ZEUS40/3VE	*40 LITERS – 3 SPEED*	*€ 8.117,00*
ZEUS40/INV	*40 LITERS - INVERTER*	*€ 8.700,00*
ZEUS60/3VE	*60 LITERS – 3 SPEED*	*€ 8.987,00*
ZEUS60/INV	*60 LITERS – INVERTER*	*€ 9.424,00*
ZEUS80/3VE	*80 LITERS– 3 SPEED*	*€ 10.727,00*
ZEUS80/INV	*80 LITERS - INVERTER*	*€ 11.306,00*

ACCESSORIES FOR PLANETARY MIXER ZEUS SERIES

AUTOMATIC BOWL LIFT FOR 40/60/80 LITRES		€ 1.354,00
DIGITAL DISPLAY 3 ORDER (MANUAL, INVERTER,		€ 812,00
DIGITAL DISPLAY 3 ORDERS AND LIFTER		€ 2.168,00
KIT REDUCTION BOWL FROM 40 TO 20 LITRES WITH 3 TOOLS		€ 2.168,00
KIT REDUCTION BOWL FROM 60 TO 40 LITRES WITH 3 TOOLS		€ 2.572,00
KIT REDUCTION BOWL FROM 80 TO 60 LITRES WITH 3 TOOLS		€ 3.384,00
WHISK 4 MM STAINLESS STEEL – 40 LITERS WHISK 4 MM STAINLESS STEEL – 60 LITERS WHISK 4 MM STAINLESS STEEL – 80 LITERS		€ 746,00 € 812,00 € 880,00
WHISK 6 MM STAINLESS STEEL – 40 LITERS WHISK 6 MM STAINLESS STEEL – 60 LITERS WHISK 6 MM STAINLESS STEEL – 80 LITERS		€ 812,00 € 880,00 € 948,00
HOOK STAINLESS STEEL – 40 LITERS HOOK STAINLESS STEEL – 60 LITERS HOOK STAINLESS STEEL – 80 LITERS		€ 542,00 € 607,00 € 690,00

SPATULA STAINLESS STEEL – 40 LITERS SPATULA STAINLESS STEEL – 60 LITERS SPATULA STAINLESS STEEL – 80 LITERS		€ 542,00 € 638,00 € 704,00
SPIRAL STAINLESS STEEL – 40 LITERS SPIRAL STAINLESS STEEL – 60 LITERS SPIRAL STAINLESS STEEL – 80 LITERS		€ 839,00 € 1.015,00 € 1.054,00
BOWL STAINLESS STEEL – 40 LITERS BOWL STAINLESS STEEL – 60 LITERS BOWL STAINLESS STEEL – 80 LITERS		€ 852,00 € 1.015,00 € 1.490,00
BOWL TROLLEY		€ 948,00
SCRAPER – 40 LITERS SCRAPER – 60 LITERS SCRAPER – 80 LITERS		€ 1.030,00 € 1.084,00 € 1.218,00
UL (APPLICATION OF UL COMPATIBLE COMPONENTS)		€ 772,00

ZTUFF SERIES

TWIN ARM KNEADING MACHINE

Painted twin arm kneading machine available with manual electromechanical panel and with automatic digital panel. Basic version with voltage 400V 50 HZ 3PH at 2 speeds.

ZTUFF40M	*MANUAL – 40KG – WITHOUT TIMER*	*€ 14.984,00*
ZTUFF40P	*AUTOMATIC – 40KG – 2 TIMERS*	*€ 15.799,00*
ZTUFF50M	*MANUAL – 50KG – WITHOUT TIMER*	*€ 15.636,00*
ZTUFF50P	*AUTOMATIC 50KG – 2 TIMERS*	*€ 16.452,00*
ZTUFF60M	*MANUAL – 60KG – WITHOUT TIMER*	*€ 16.614,00*
ZTUFF60P	*AUTOMATICO – 60KG 2 TIMERS*	*€ 17.428,00*

GENERAL TERMS OF SALE

PRICES

Prices are always VAT excluded. The minimum invoice amount is €100.00.
Sales, allowances and rounding off are not accepted, but for previous authorized agreements.

PAYMENT

Payment must be done at ready goods for the first supply and for spare parts. Beyond these deadlines, use interests will be calculated. Every payment must be made out to our company and at our base.

BANKS

CREDITO EMILIANO SPA
FILIALE: AGENZIA 2 PADOVA
IBAN: IT 59 R 03032 12100 010000500875
SWITF: BACRIT21155

BANCA INTESA SAN PAOLO
AGENZIA: CONSELVE
IBAN: IT 33 B030 6962 5441 0000 0004 511
SWIFT: BCITITMM

TRANSPORT

The items are ex works *Candiana (PD) - ITALY. If you prefer, the company can calculate the freight cost for a courier or a forwarder. For further installations, please request an estimate.*

DELIVERY

MANUAL DOUGH SHEETERS	*30 working days from order confirmation/payment*
AUTOMATIC DOUGH SHEETERS	*30 working days from order confirmation/payment*
CROISSANT MOULDERS	*30 working days from order confirmation/payment*
MAKE UP LINES	*30 working days from order confirmation/payment*
CROISSANT MACHINES	*40 working days from order confirmation/payment*
CALIBRATORS	*40 working days from order confirmation/payment*
CUTTERS	*30 working days from order confirmation/payment*
PLANETARY MIXERS	*40 working days from order confirmation/payment*
TWIN ARM MIXERS	*40 working days from order confirmation/payment*

The delivery time is indicative. Ask before the order.

PACKING

Please see the following page. If you require other packings, we will estimate the price.

VOLTAGE

For voltages different than those reported, contact the sales office for a quote.

PRICE LIST 2025

Data and features related are indicative. The company reserves the right to make any changes, without notice, before the next press/edition. Everything will be confirmed during the negotiation.

COURT HAVING JURISDICTION

For any disputes, the Italian law and the Court of Padova have sole jurisdiction. Machines according to european directives and regulations.

PACKING

MODEL	NET W.	GROSS W.	PALLET*	CARTON DIM.	CAGE DIM
SF500SP	70 KG	80 KG	91X43X63	91X43X63	91X43X63
ZMC30 ZMC40 ZMC60	20 KG 26 KG 41 KG	30 KG 36 KG 51 KG	X X X	52X51X64 63X53X64 82X66X72 **€ 65**	X X X
SHB50B050 SHB50B075 SHB50B100 SHB60B100	135 KG 140 KG 145 KG 155 KG	155 KG 160 KG 165 KG 175 KG	80X120X90 80X120X115 80X120X115 80X120X115 **€ 55**	80X120X130 80X120X130 80X120X130 80X120X130 **€ 95**	90X130X100 90X130X130 90X130X130 90X130X130 **€ 225**
SHB50B075B SHB50B100B SHB60B100B	190 KG 195 KG 200 KG	210 KG 215 KG 220 KG	110X120X175 110X120X190 110X120X190 **€ 55**	110X120X200 110X120X200 110X120X200 **€ 95**	130X130X185 130X130X200 130X130X200 **€ 225**
SHB60B120B SHB60B140B SHB50B120B	205 KG 210 KG 200 KG	225 KG 230 KG 220 KG	110X120X220 110X120X240 110X120X220 **€ 55**	X X X	120X130X230 120X130X250 120X130X230 **€ 285**
SHE50075	215 KG	235 KG	110X120X180 **€ 55**	X	120X130X180 **€ 225**
SHE50100	220 KG	240 KG	110X120X155 **€ 55**	110X120X200 **€ 95**	120X130X180 **€ 225**
SHE60100	250 KG	270 KG	110X120X150 **€ 55**	110X120X200 **€ 95**	120X130X180 **€ 225**
SHE60120 SHE50120 SHE60140 SHE60160 SHE65140 SHE65160	260 KG 225 KG 270 KG 275 KG 285 KG 295 KG	280 KG 245 KG 290 KG 295 KG 305 KG 315 KG	110X120X180 110X120X180 110X120X180 110X120X180 110x120X165 110X120X180 **€ 55**	110X120X200 110X120X200 110X120X200 110X120X200 110X120X200 110X120X200 **€ 95**	120X130X190 120X130X190 120X130X190 120X130X190 120X130X175 190X120X190 **€ 225**
SHE100130	350 KG	380 KG	120X160X165 **€ 65**	X	180X130X190 **€ 285**
SHE6014DT SHE6016DT	305 KG 315 KG	325 KG 335 KG	110X120X190 110X120X190 **€ 55**	110X120X200 110X120X200 **€ 95**	120X130X200 120X130X200 **€ 225**
SHE6514DT SHE6516DT	315 KG 320 KG	335KG 340 KG	110X120X190 110X120X190 **€55**	110X120X200 110X120X200 **€95**	120X130X200 120X130X200 **€225**
SF6514A	450 KG	500 KG	180X130X180 **€ 65**	X	190X140X200 **€ 325**
SF6516A**	280 KG 200 KG	330 KG 250 KG	125X90X210 200X105X100 **€ 135**	X	135X100X220 210X110X110 **€ 335**
SF6520A**	500 KG	530 KG	125X90X210 250X105X100 **€ 135**	X	135X100X220 260X110X110 **€ 385**

GC200 GC400	500 KG 500 KG	520 KG 520 KG	200X100X150 200X100X150 **€ 80**	X	210X110X160 210X110X160 **€ 325**
AVV200	160 KG	180KG	90X90X120 **€ 55**	X	100X100X130 **€ 185**
TL200-I	165 KG	195 KG	230X100X130 **€ 95**	X	240X110X150 **€ 325**
TL250-I	180 KG	220 KG	300X100X130 **€ 125**	X	310X110X150 **€ 330**
TL300-I	200 KG	250 KG	330X100X130 **€ 135**	X	340X110X150 **€ 375**
TL350-I	235 KG	285 KG	380X100X130 **€ 165**	X	390X110X150 **€ 375**
TL400-I	255 KG	305 KG	430X100X130 **€ 170**	X	440X110X150 **€ 430**
TL450-I	310 KG	360 KG	480X100X130 **€ 185**	X	490X110X150 **€ 430**
TL500-I	330 KG	430 KG	530X100X130 **€ 200**	X	540X110X150 **€ 480**
TL550-I	360 KG	460 KG	580X100X130 **€ 215**	X	590X110X150 **€ 480**
TL600-I	450 KG	550 KG	630X100X130 **€ 230**	X	640X110X150 **€ 530**
ZCL600-I	250 KG	280 KG	200X105X170 **€ 55**	X	210X115X190 **€ 225**
ZPL7	17 KG	19 KG	X	47X29X49	X
ZPL12	46 KG	52 KG	X	59X63X96	X
ZPL203B	56 KG	63 KG	X	70X55X96	X
ZEUS40	285 KG	315 KG	100X125X160 **€ 55**	100X125X170 **€ 95**	110X135X170 **€ 225**
ZEUS60	290 KG	320 KG	100X125X160 **€ 55**	100X125X170 **€ 95**	110X135X170 **€ 225**
ZEUS80	295 KG	325 KG	100X125X160 **€ 55**	100X125X170 **€ 95**	110X135X170 **€ 225**
ZTUFF40	300 KG	335 KG	X	80X115X165 **€ 95**	86X121X167 **€ 175**
ZTUFF50	300 KG	338 KG	X	80X115X165 **€ 95**	86X121X167 **€ 175**
ZTUFF60	300 KG	340 KG	X	80X115X165 **€ 95**	86X121X167 **€ 175**

*(CENTIMETERS)

**MACHINE WITH DISASSEMBLED DECKS. THE DIMENSIONS DO NOT TAKE INTO CONSIDERATION THE OPTIONALS TO BE APPLIED.

NOTE: WEIGHTS AND DIMENSIONS ARE APPROXIMATE AND THEY DO NOT REPLACE VGM OBLIGATORY MANDATORY WEIGHING.

THE PACKAGING PRICES ARE NET AND ANY DISCOUNT IS APPLICABLE.

IF YOU CHOOSE THE ONLY PALLET, WE WILL NOT BE RESPONSIBLE FOR ANY DAMAGES TO THE GOODS DURING TRANSPORT.

GUARANTEE

The manufacturer guarantees the components not subject to wear and tear for 1 year (in any case no more than 12 months from the date of shipment and with its installation form included in the documentation). These conditions are valid only if it has been done a correct use of the machine, for maximum one working shift per day, and serviced by proper maintenance.
The transportation is not covered by the warranty. The manufacturer cannot be held liable for any loss or damage, direct or indirect, in particular lost production due to any malfunction of the equipment and/or plant, also traced back to defects in manufacturing and/or assembly. Repairs or replacements of parts under warranty do not extend the length of time itself, for all equipment.
Improper use of the machine, i.e. outside of the intended use, the non-performing operations and ordinary maintenance control and/or programmed to intervals, failure on the part of employees of accident prevention regulations will be considered sufficient grounds to declare immediately declined any form of warranty. In addition, the manufacturer is not subject to the obligations of the warranty for malfunctions, damage and/or inefficiencies arising from causes such as incorrect installation, tampering or inadvertent, improper maintenance, neglect and inability of the end user. Modifications and repairs carried out by people not authorized in writing by the manufacturer company will void the warranty. Finally, the manufacturer reserves the right to void the warranty of the products sold if labels or nameplates bearing the manufacturer's mark and the serial number or serial number have been deleted or removed.
The manufacturer during the warranty period will replace as soon as possible and exworks the parts found to be defective in the manufacturer's rating for the poor quality of materials, workmanship defect. These conditions are valid only if reported within a maximum of 8 days from the occurrence of the defect; and if this does not depend on any failures caused by incompetence and/or negligence of the buyer, from overloads beyond the prescribed limits, from unauthorized tampering.

For accessories that the manufacturer has purchased from other suppliers prevailing against the buyer the guarantees given by the supplier. The emergency repairs under warranty from the retailer remains subject to compliance with the conditions of payment by the buyer. Jobs related to repairs and/or replacements under warranty will be at the discretion of the manufacturer, performed in the workshops of the selling company and/or third parties.
Personal assistance of the retailer at Buyer's premises shall be governed by a special "ad hoc" agreement at the request of the same buyer. It will be borne by the selling company working hours only, not the costs/hours of travel and accommodation costs. Nothing will be due to the buyer for the time during which the equipment and/or plant were operative, nor will the buyer can claim compensation or compensation for expenses and/or for any direct and/or indirect damages resulting from the failure to such repairs and/or replacements.
The parts replaced remain property of the manufacturer and must be returned to seller by buyer post-paid and packing.

Specifically excluded from the warranty are all electrical parts and conveyor belts.

Any dispute will have jurisdiction in the Court of Padua and the Italian law.

NOTES

Z.MATIK

DOUGH LOVERS

Z.Matik S.r.l.

Via dell'Artigianato IV Strada, 6
35020 Candiana (Padova), Italy
Tel: +39 049 95 999 35
www.zmatik.com - info@zmatik.com - z.matiksrl@pec.it
C.F./P.I./N. Reg. Imp. IT05088270284 - Rea PD442032 - Cap. Soc. €50.000 I.V.