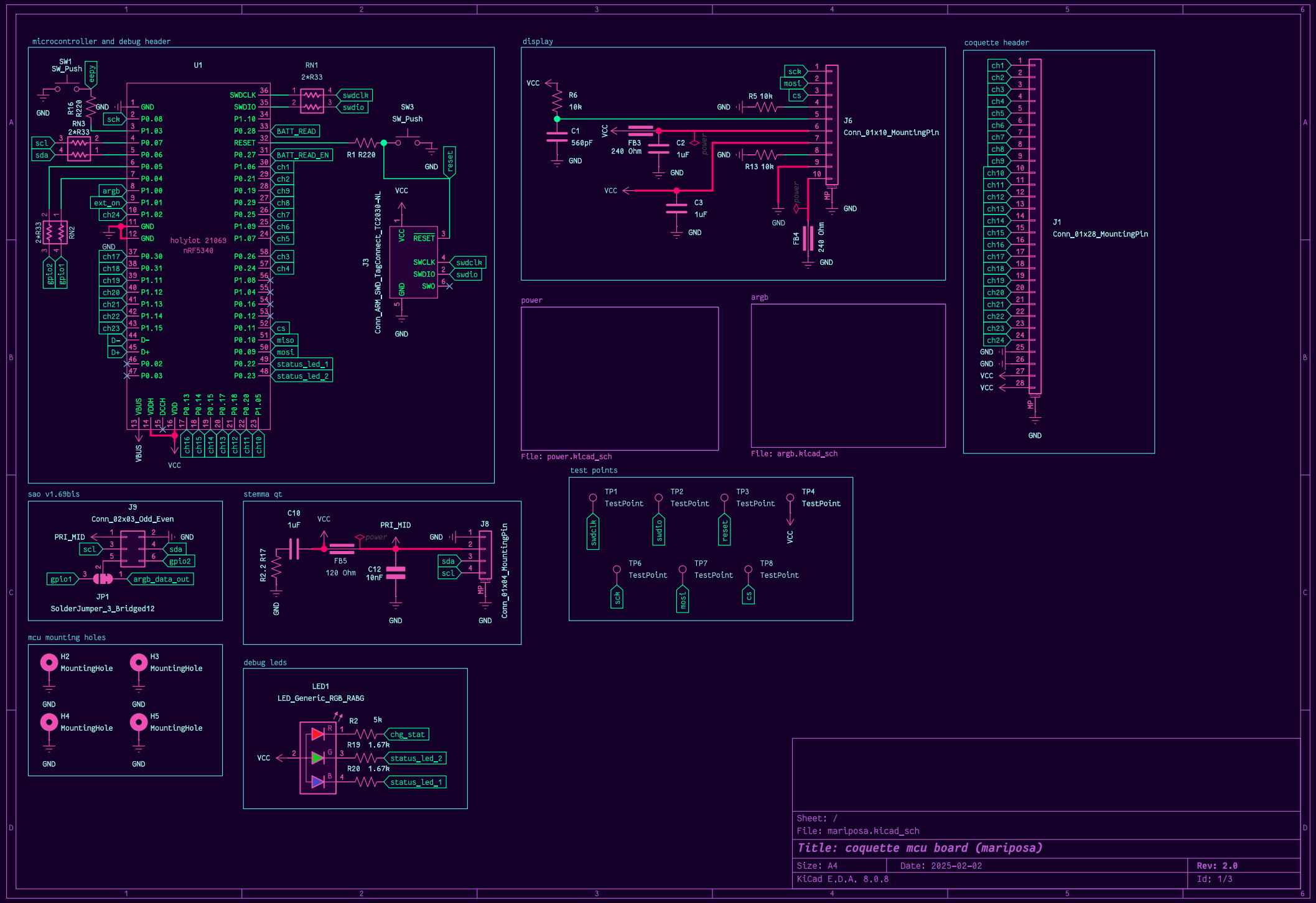
microcontroller and debug header
U1
holyiot 21069
nRF5340
SW1
SW_Push
SW3
SW_Push
RN1
2*R33
RN2
2*R33
RN3
2*R33
R16
R220
R1 R220
J3
Conn_ARM_SWD_TagConnect_TC2030-NL
display
J6
Conn_01x10_MountingPin
R6
10k
C1
560pF
FB3
240 Ohm
C2
1uF
C3
1uF
R5 10k
R13 10k
FB4
240 Ohm
power
File: power.kicad_sch
argb
File: argb.kicad_sch
coquette header
J1
Conn_01x28_MountingPin
test points
TP1
TestPoint
TP2
TestPoint
TP3
TestPoint
TP4
TestPoint
TP6
TestPoint
TP7
TestPoint
TP8
TestPoint
sao v1.69bis
J9
Conn_02x03_Odd_Even
JP1
SolderJumper_3_Bridged12
stemma qt
C10
1uF
R2.2 R17
FB5
120 Ohm
C12
10nF
J8
Conn_01x04_MountingPin
mcu mounting holes
H2
MountingHole
H3
MountingHole
H4
MountingHole
H5
MountingHole
debug leds
LED1
LED_Generic_RGB_RABG
R2 5k
R19 1.67k
R20 1.67k
chg_stat
status_led_2
status_led_1
Sheet: /
File: mariposa.kicad_sch
Title: coquette mcu board (mariposa)
Size: A4
Date: 2025-02-02
Rev: 2.0
KiCad E.D.A. 8.0.8
Id: 1/3

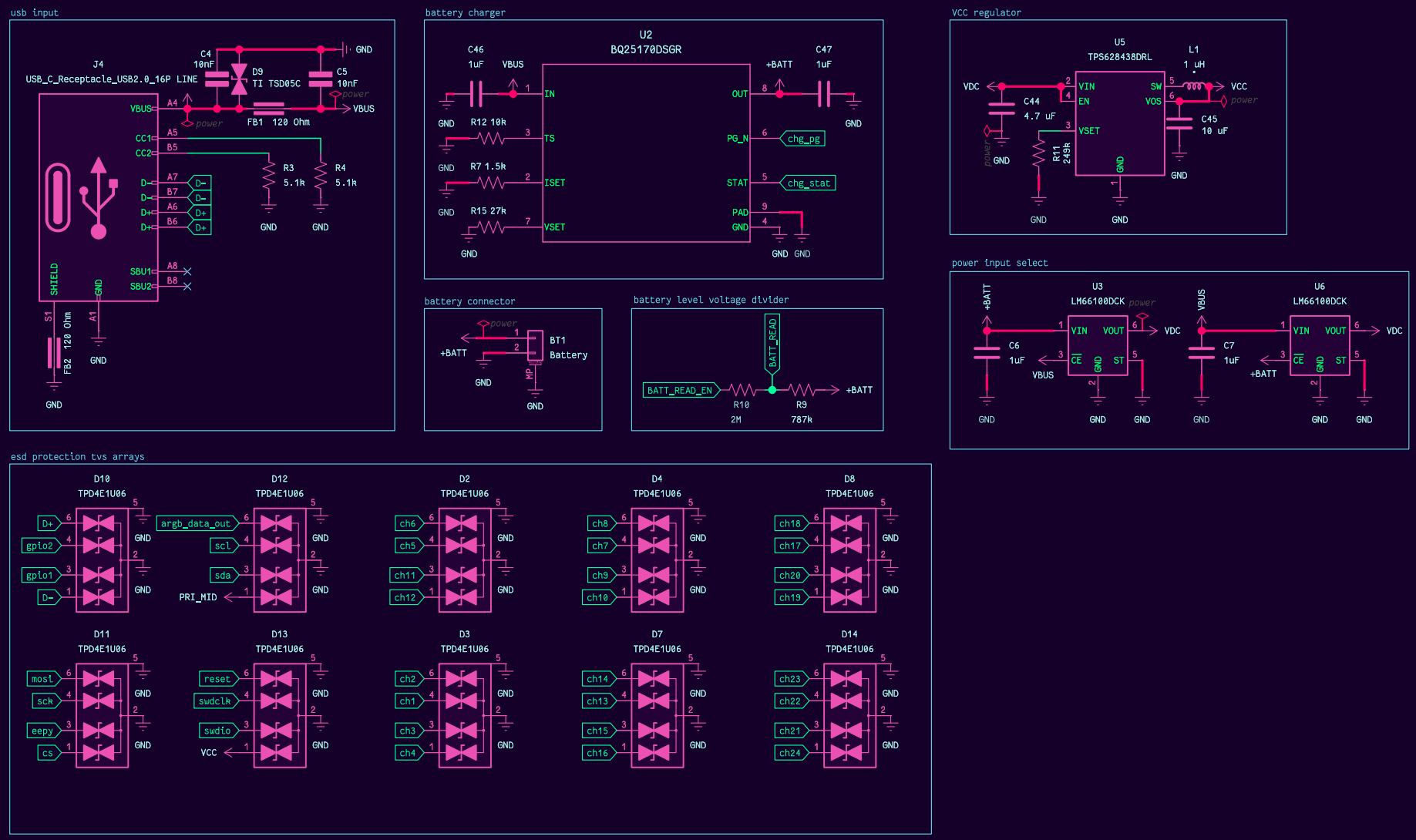

Sheet: /power/
File: power.kicad_sch

Title: coquette mariposa power management

Size: A4	Date: 2025-02-02	Rev: 2.0
KiCad E.D.A. 8.0.8		Id: 2/3

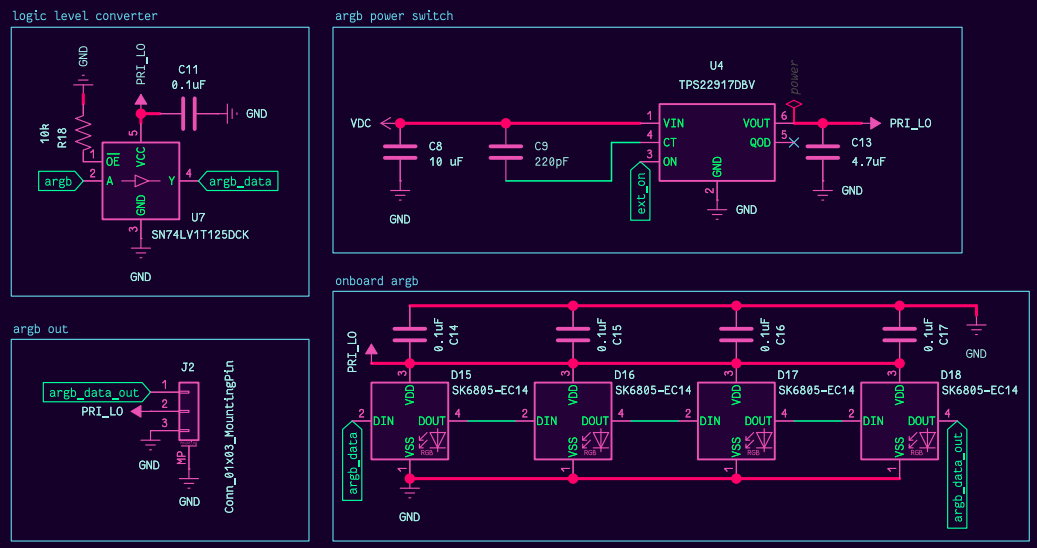

Sheet: /argb/
File: argb.kicad_sch

Title:

Size: A4	Date: 2025-02-02	**Rev: 2.0**
KiCad E.D.A. 8.0.8		Id: 3/3