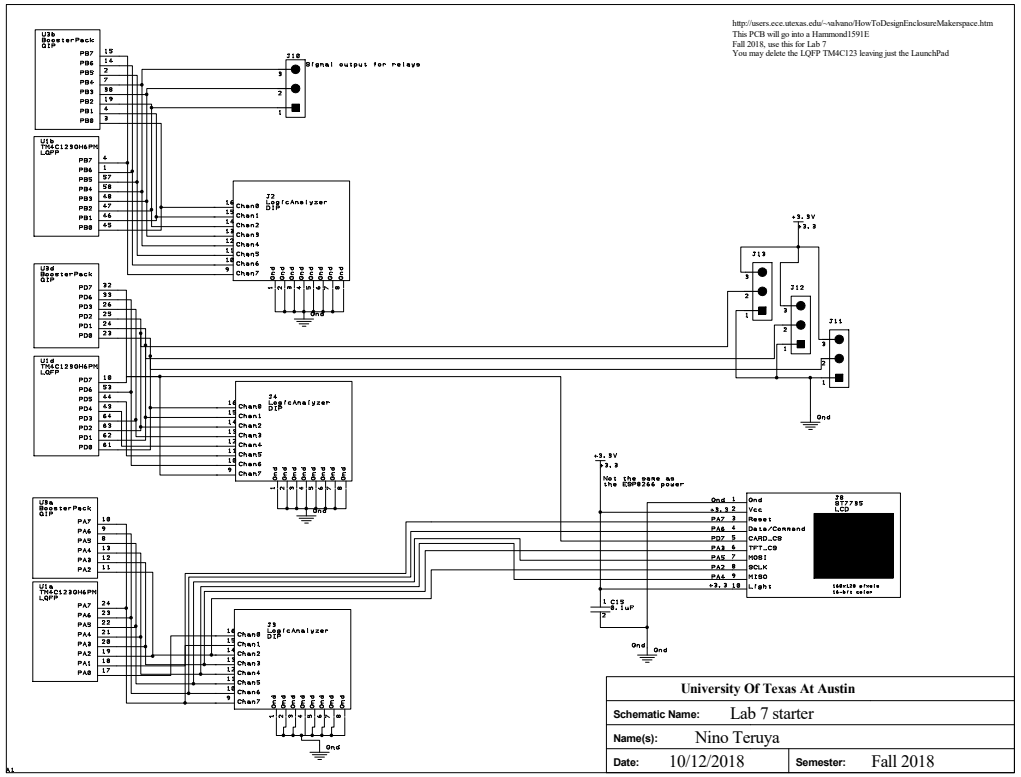
http://users.ece.utexas.edu/~valvano/HowToDesignEnclosureMakerspace.htm
This PCB will go into a Hammond1591E
Fall 2018, use this for Lab 7
You may delete the LQFP TM4C123 leaving just the LaunchPad
Signal output for relays
Not the same as the ESP8266 power
University Of Texas At Austin
Schematic Name: Lab 7 starter
Name(s): Nino Teruya
Date: 10/12/2018
Semester: Fall 2018

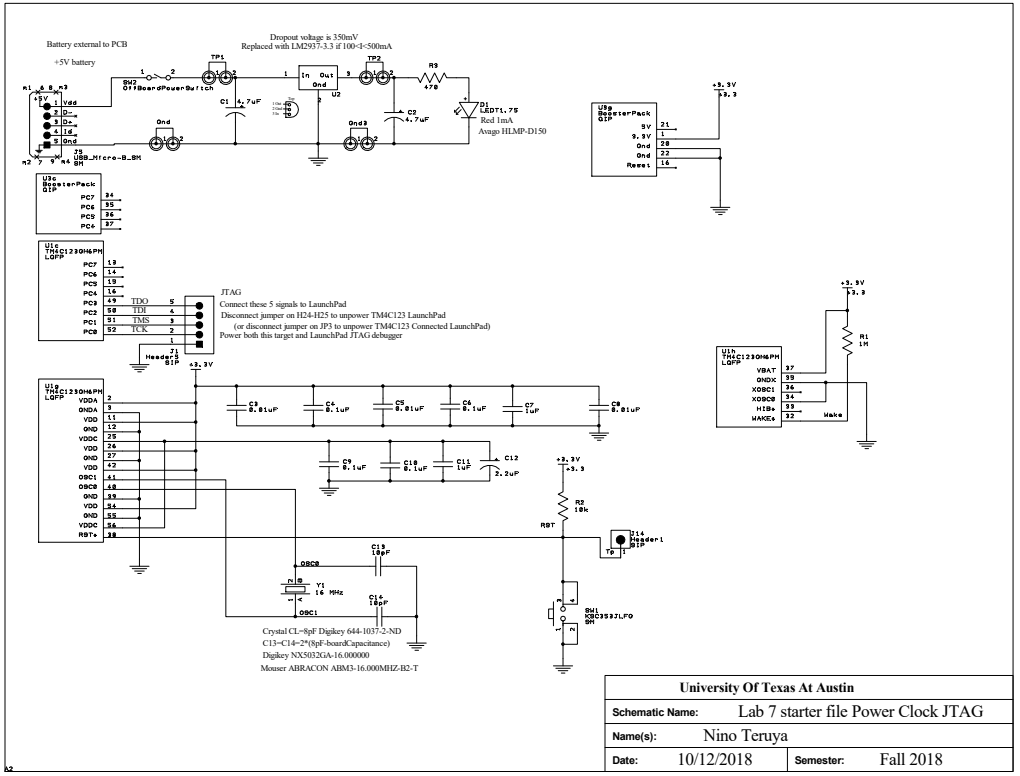
Battery external to PCB
+5V battery
Dropout voltage is 350mV
Replaced with LM2937-3.3 if 100<I<500mA
JTAG
Connect these 5 signals to LaunchPad
Disconnect jumper on H24-H25 to unpower TM4C123 LaunchPad
(or disconnect jumper on JP3 to unpower TM4C123 Connected LaunchPad)
Power both this target and LaunchPad JTAG debugger
Crystal CL=8pF Digikey 644-1037-2-ND
C13=C14=2*(8pF-boardCapacitance)
Digikey NX5032GA-16.000000
Mouser ABRACON ABM3-16.000MHZ-B2-T
University Of Texas At Austin
Schematic Name: Lab 7 starter file Power Clock JTAG
Name(s): Nino Teruya
Date: 10/12/2018
Semester: Fall 2018

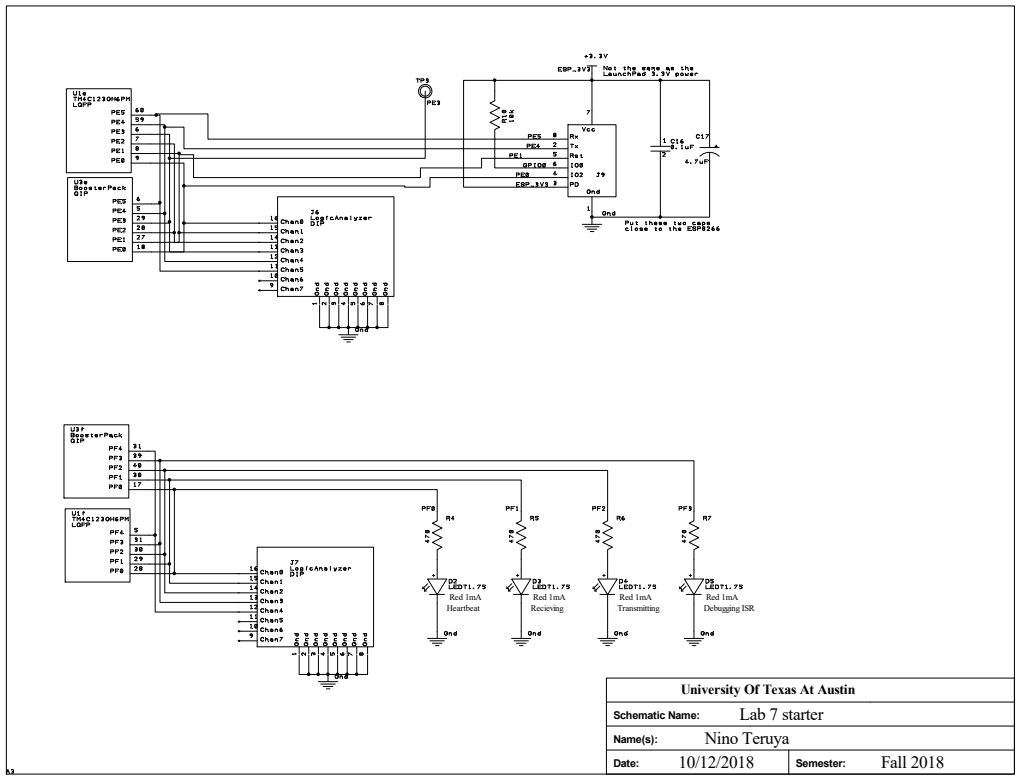
Not the same as the LaunchPad 3.3V power
Put these two caps close to the ESP8266
Heartbeat
Recieving
Transmitting
Debugging ISR
University Of Texas At Austin
Schematic Name: Lab 7 starter
Name(s): Nino Teruya
Date: 10/12/2018
Semester: Fall 2018