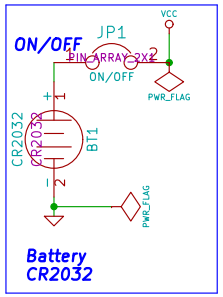


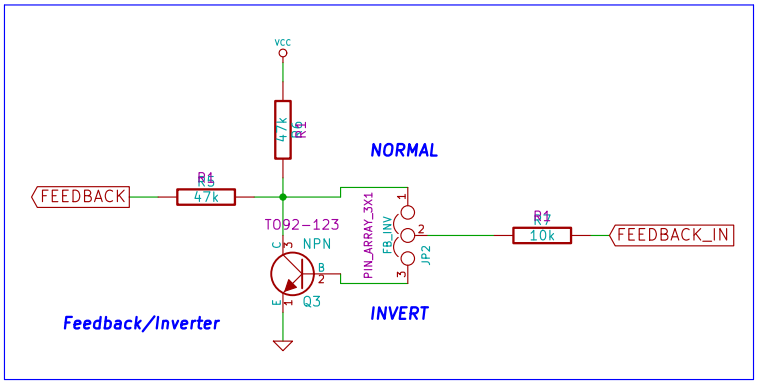


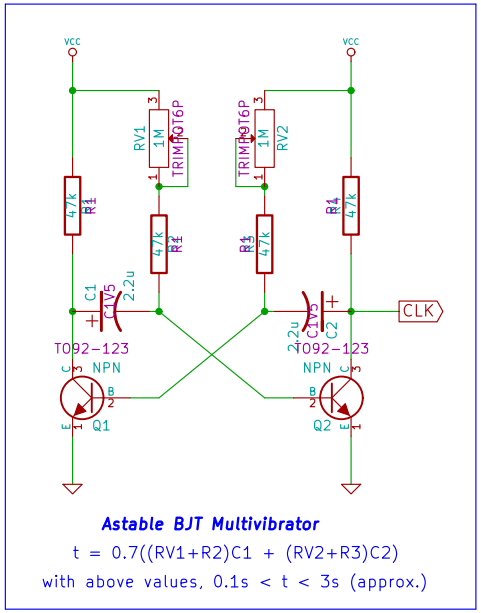


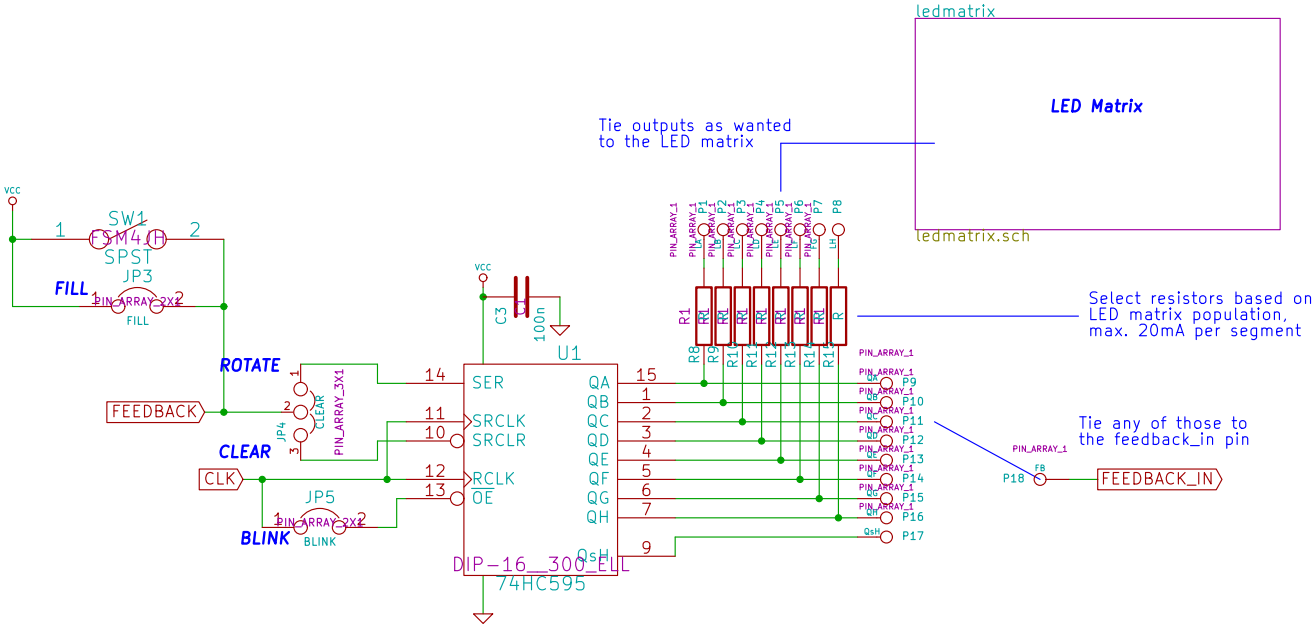


CERN OHL v.1.1 or later
(c) 2012 Simon Schubert <2@0x2c.org>

File: practice-nametag.sch
Sheet: /

**Title: Blinking name tag**

| Size: A4 | Date: 26 jan 2012 | Rev: 1 |
|---|---|---|
| KiCad E.D.A. | | Id: 1/2 |