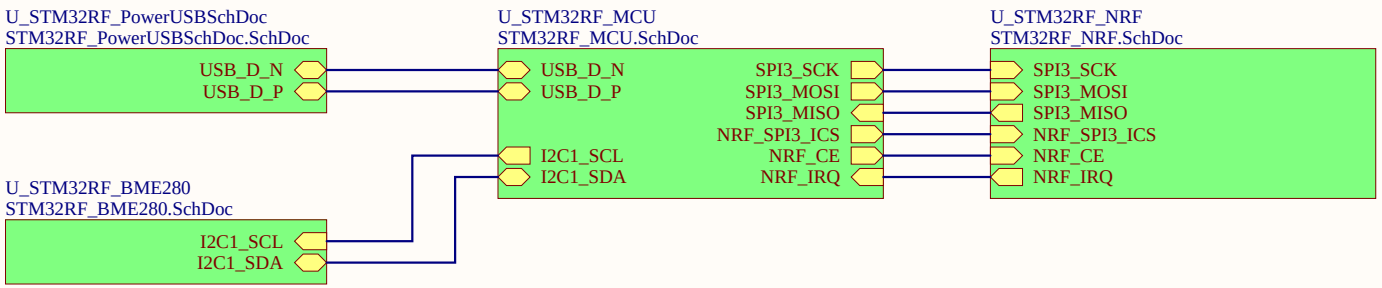


| | | |
|---|---|---|
| Title: Weather Station Top Level | | |
| Size: A | Number | Revision: V: 0.1 |
| Date: 2/17/2026 | | Sheet of |
| File: C:\Users\..\STM32RF_TopLevel.SchDoc | | Drawn By: |

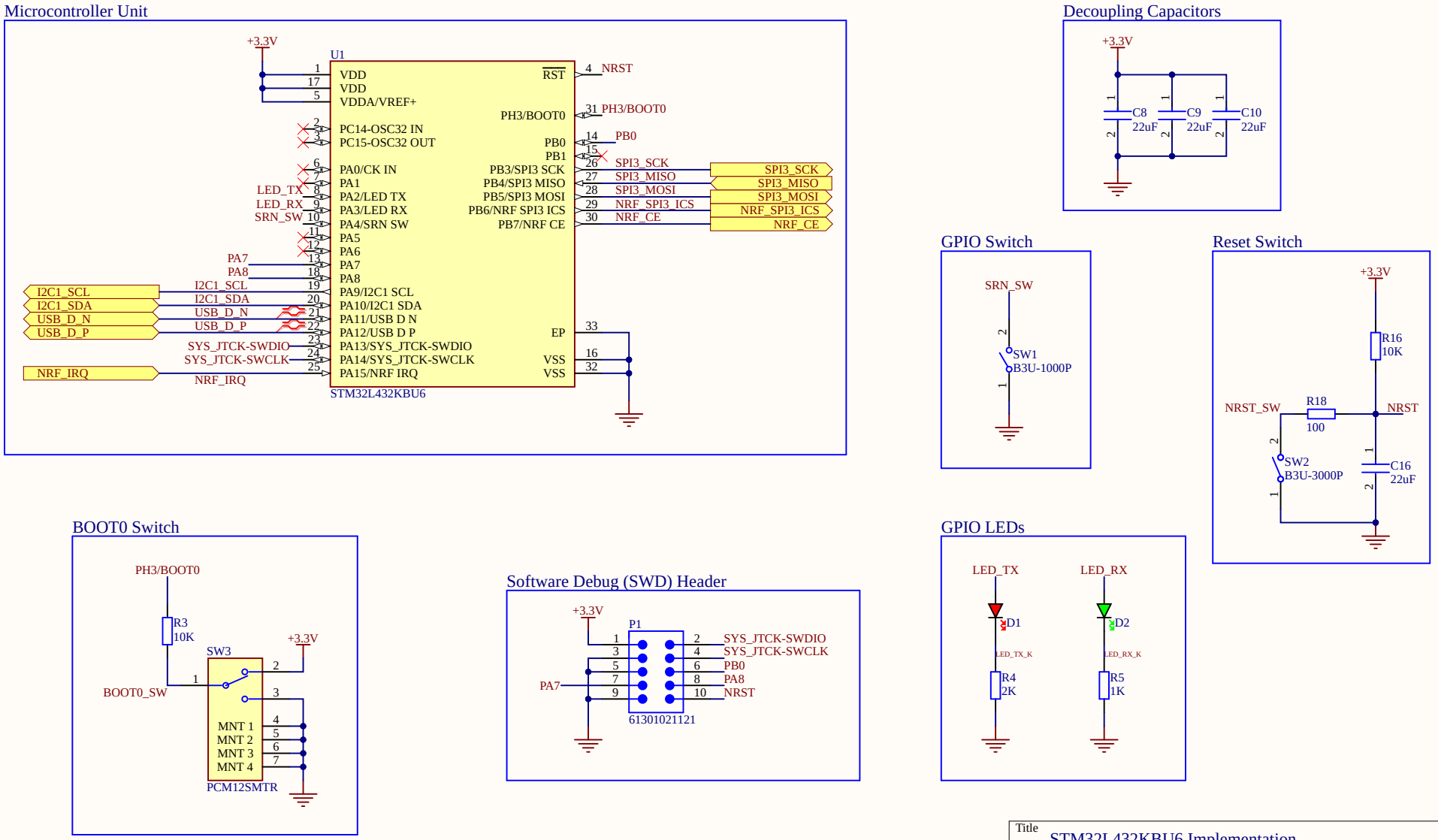


| | | |
|---|---|---|
| Title | STM32L432KBU6 Implementation | |
| Size A4 | Number | Revision V: 0.1 |
| Date: 2/17/2026 | | Sheet of |
| File: C:\Users\..\STM32RF_MCU.SchDoc | | Drawn By: |

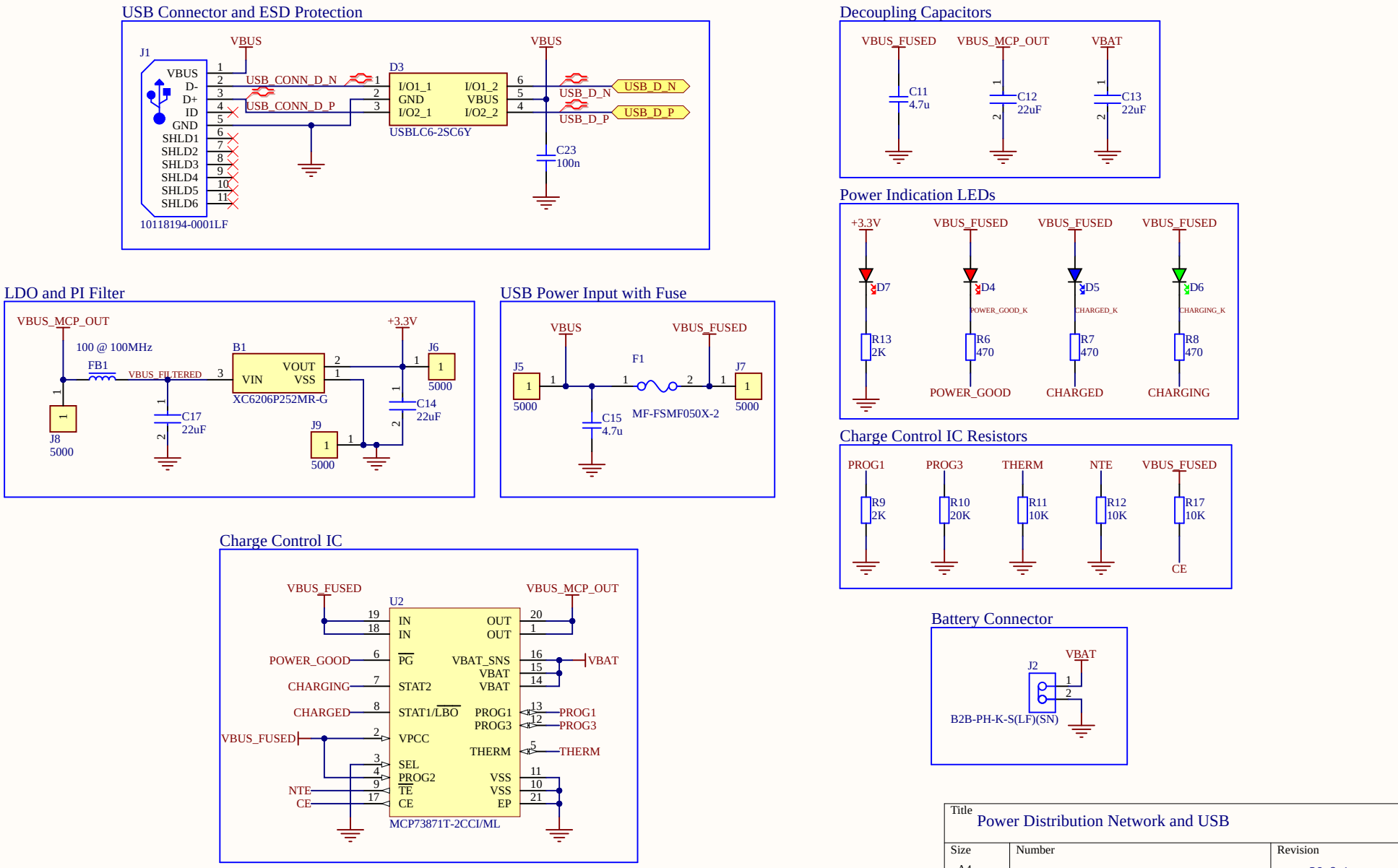


| | | |
|---|---|---|
| Title | Power Distribution Network and USB | |
| Size A4 | Number | Revision V: 0.1 |
| Date: 2/17/2026 | | Sheet of |
| File: C:\Users\..\STM32RF_PowerUSBSchDoc.SchDoc | | Drawn By: |

## 2.4GHz Transceiver IC

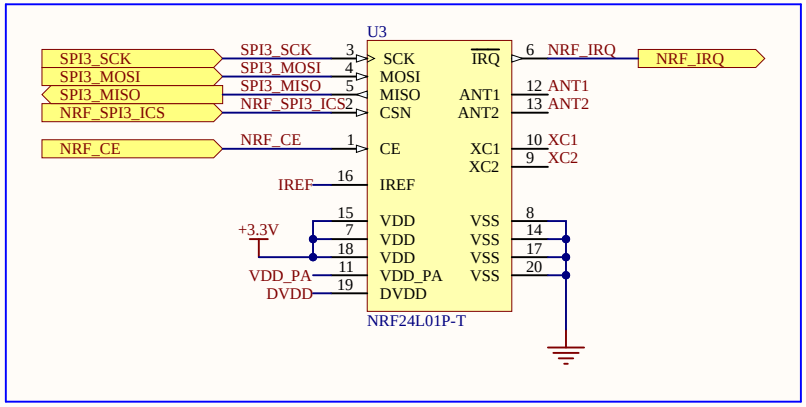


## Decoupling Capacitors

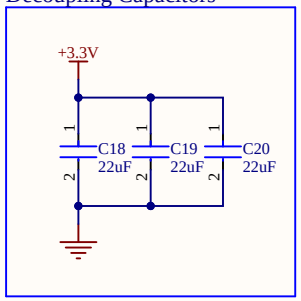


## IC Application

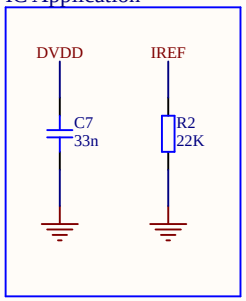


## RF Matching Network

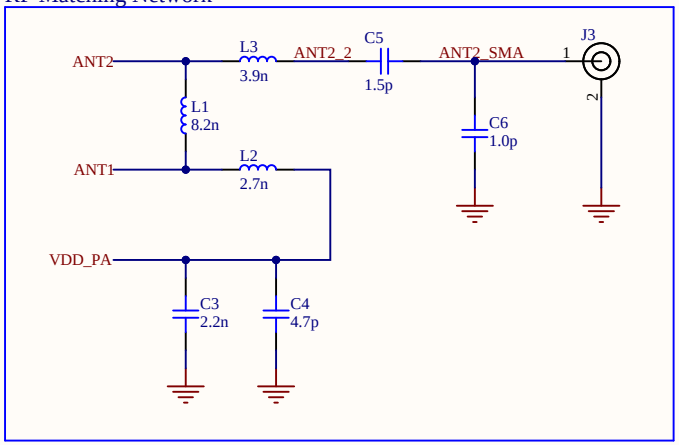


## Transceiver Crystal

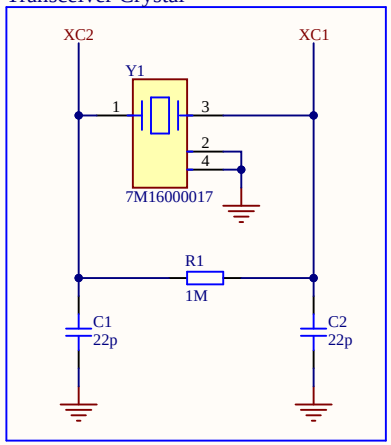


| | | |
|---|---|---|
| Title | NRF24L01 Implementation | |
| Size A4 | Number | Revision V: 0.1 |
| Date: 2/17/2026 | | Sheet of |
| File: C:\Users\..\STM32RF_NRF.SchDoc | | Drawn By: |

## Decoupling Capacitors

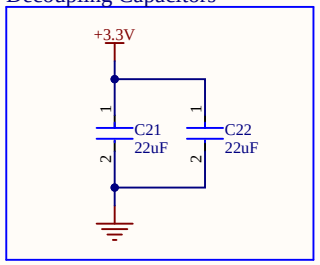


## Temperature, Pressure, and Humidity Sensor and I2C Header for SSD1306 OLED Board

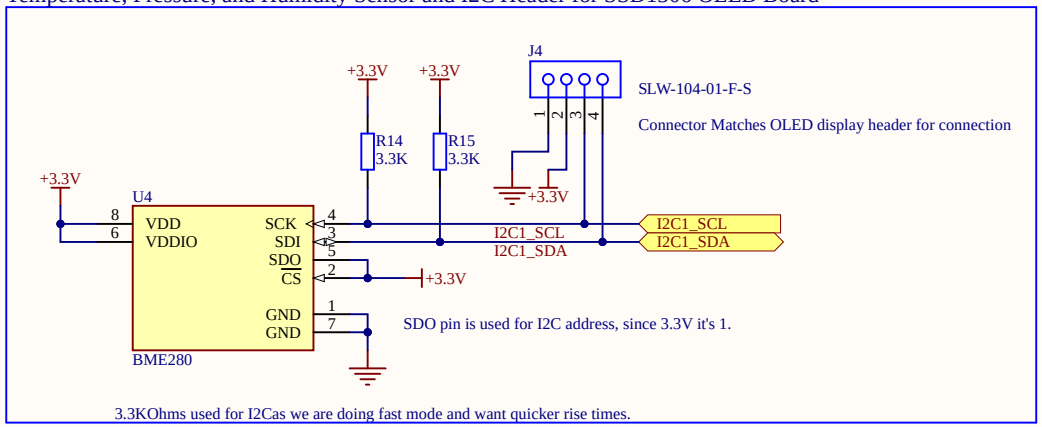


| | | |
|---|---|---|
| Title | BME280 Implementation | |
| Size A4 | Number | Revision V: 0.1 |
| Date: 2/17/2026 | | Sheet of |
| File: C:\Users\..\STM32RF_BME280.SchDoc | | Drawn By: |

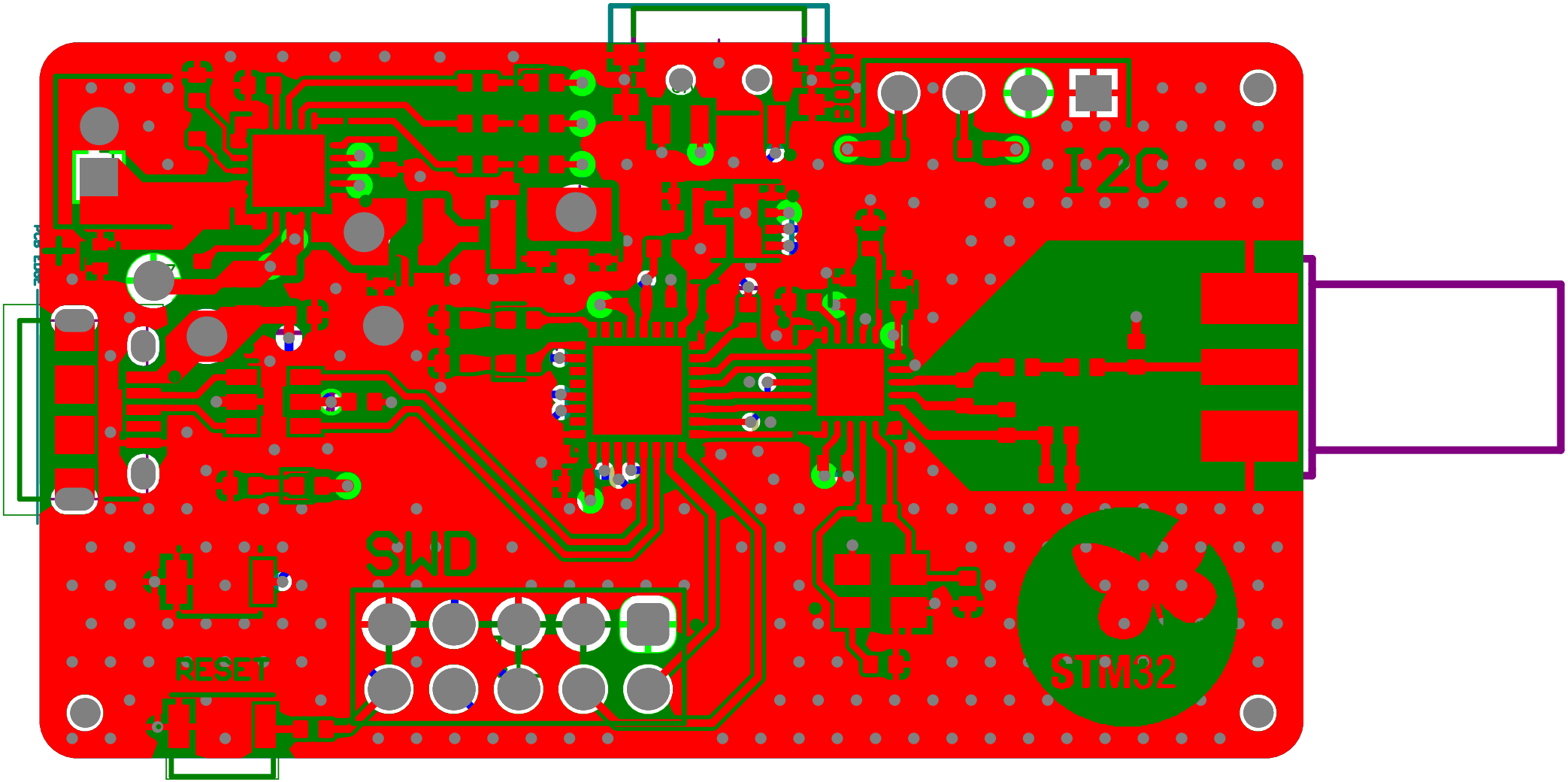
I2C
SWD
RESET
STM32

# Board Stack Report