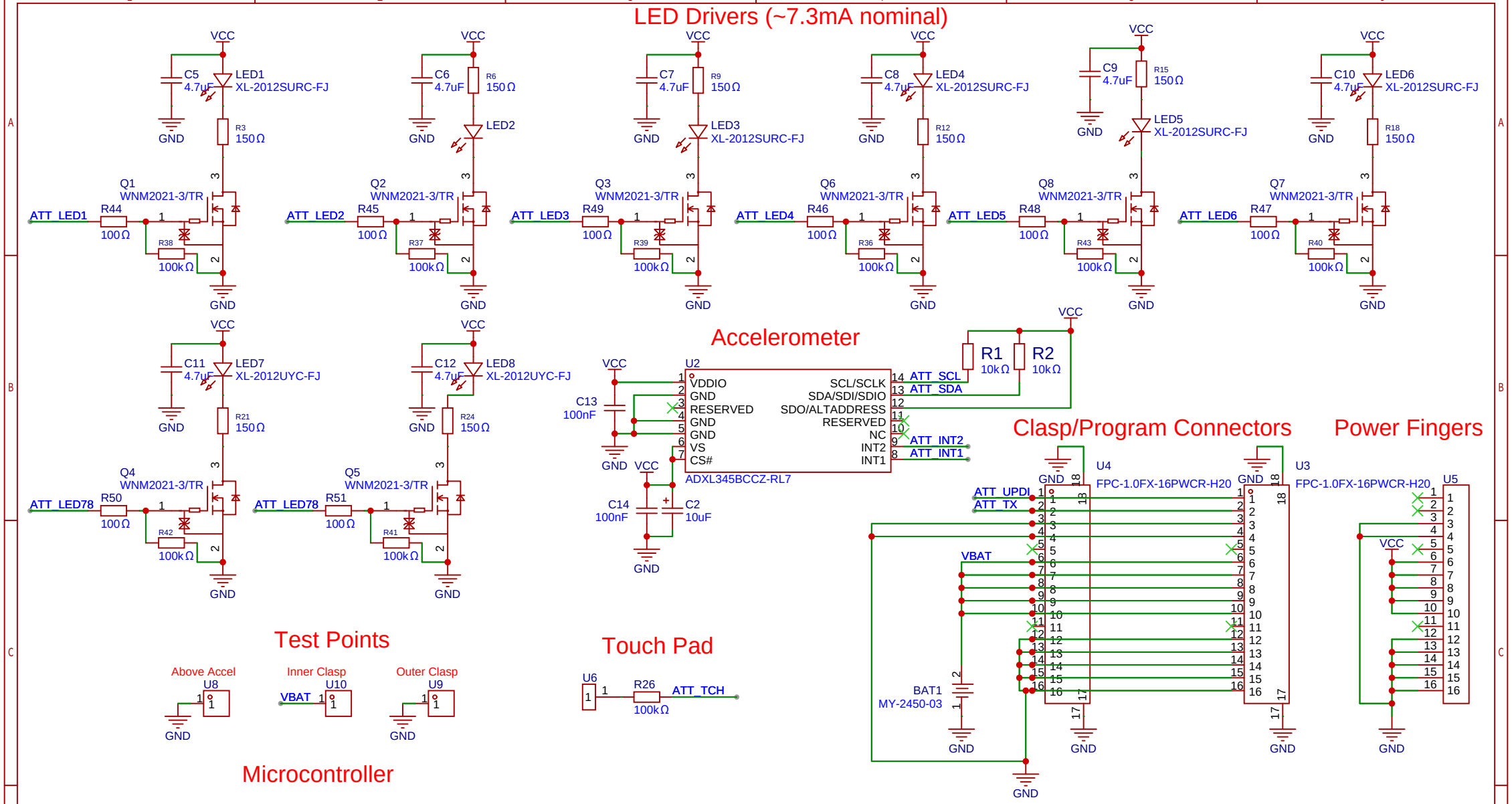

Schematic	WeddingLEDBracelet	Create at	2025-08-08
		Update at	2025-08-23
Board	WeddingLEDBracelet_R3	Page	P1
Drawn			
Reviewed			
		Version	Size	Page 1 Total 1
EasyEDA		V1.0	A4	EasyEDA.com

WeddingLEDBracelet