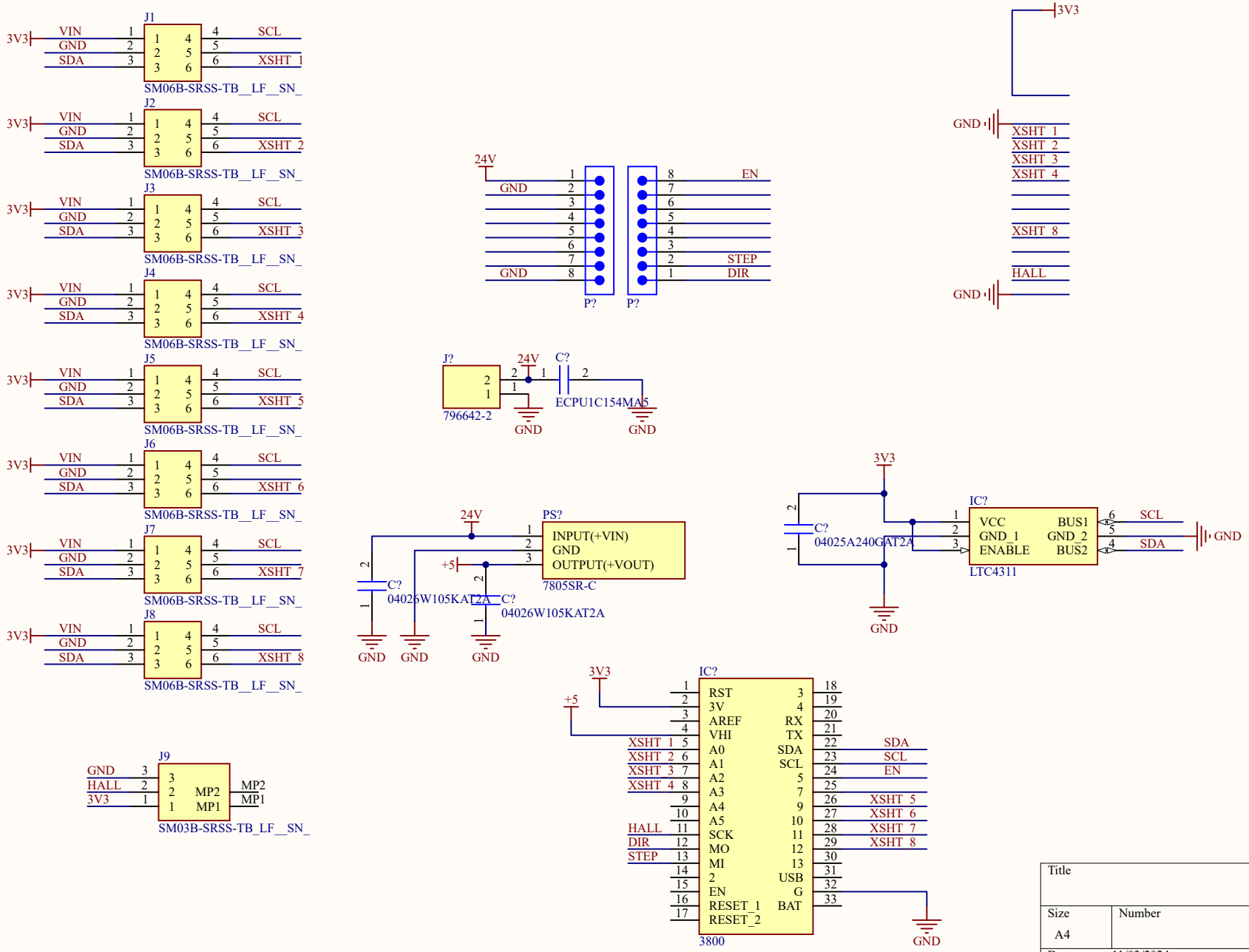

Title		
Size A4	Number	Revision
Date: 11/03/2024	Sheet of	
File: C:\Users\..\Shy-Mirror-master-revB.SchDoc	Drawn By:	