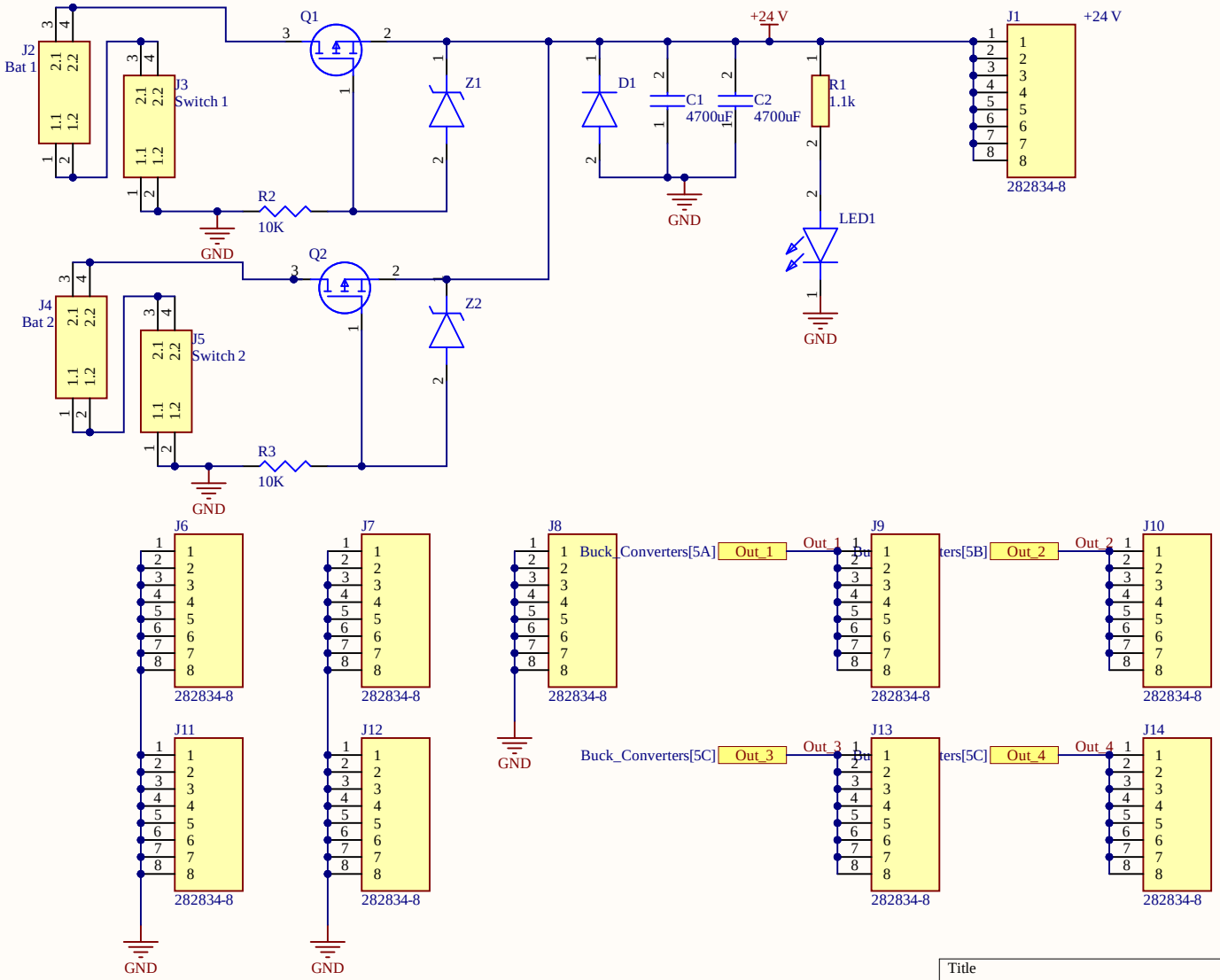

Title		
Size A	Number	Revision
Date: 4/22/2023	Sheet of	
File: C:\Users\..\Power_Board_Schematic.SchDoc	Drawn By:	

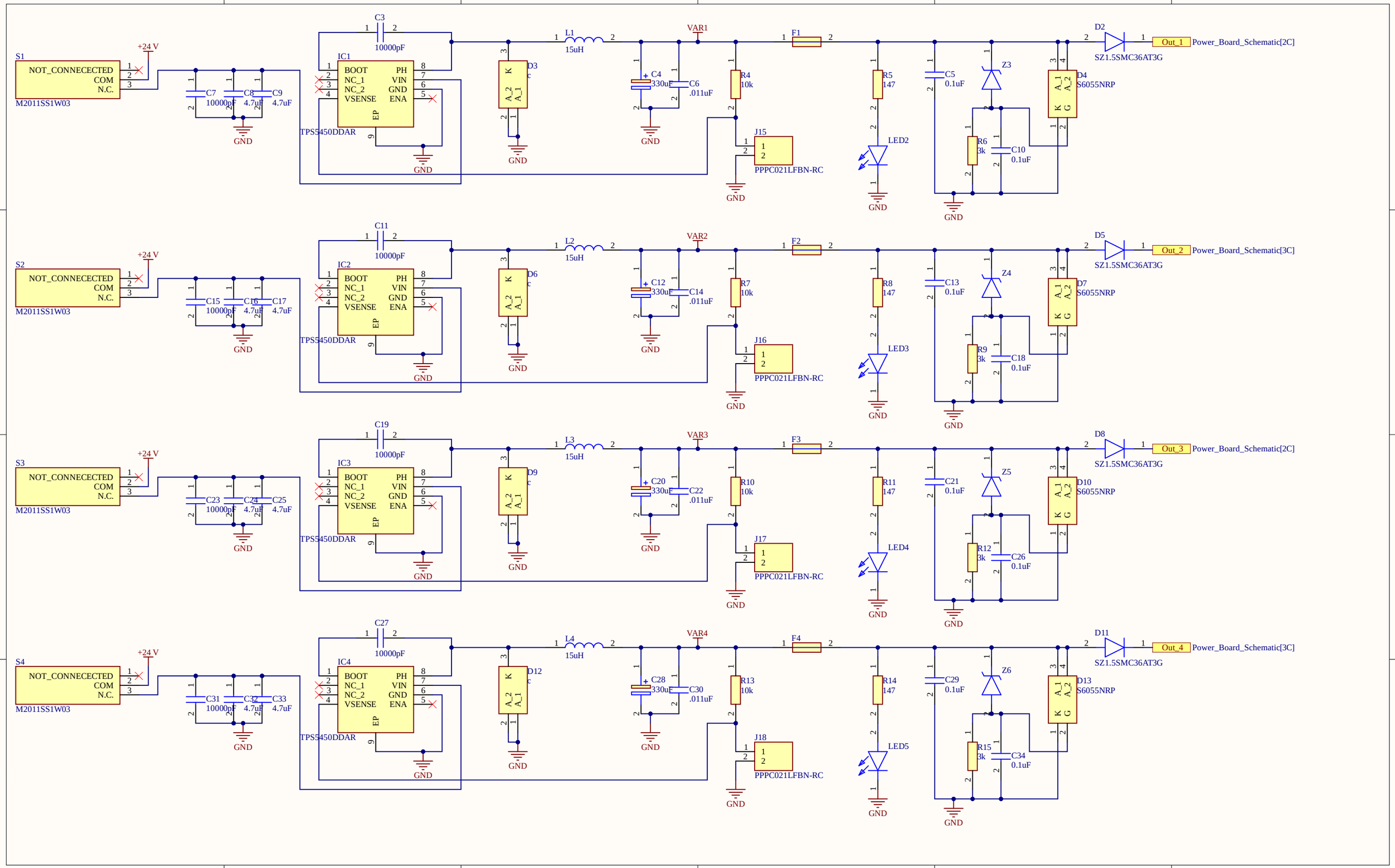
S1
NOT_CONNECECTED
COM
N.C.
M2011SS1W03
+24 V
C7 10000pF
C8 4.7uF
C9 4.7uF
GND
C3 10000pF
IC1
BOOT
NC_1
NC_2
VSENSE
PH
VIN
GND
ENA
EP
TPS5450DDAR
D3
L1 15uH
VAR1
C4 330uF
C6 .011uF
R4 10k
J15
PPPC021LFBN-RC
F1
R5 147
LED2
C5 0.1uF
Z3
R6 3k
C10 0.1uF
D4 S6055NRP
D2 SZ1.5SMC36AT3G
Out_1
Power_Board_Schematic[2C]
S2
C15 10000pF
C16 4.7uF
C17 4.7uF
C11 10000pF
IC2
D6
L2 15uH
VAR2
C12 330uF
C14 .011uF
R7 10k
J16
F2
R8 147
LED3
C13 0.1uF
Z4
R9 3k
C18 0.1uF
D7 S6055NRP
D5 SZ1.5SMC36AT3G
Out_2
Power_Board_Schematic[3C]
S3
C23 10000pF
C24 4.7uF
C25 4.7uF
C19 10000pF
IC3
D9
L3 15uH
VAR3
C20 330uF
C22 .011uF
R10 10k
J17
F3
R11 147
LED4
C21 0.1uF
Z5
R12 3k
C26 0.1uF
D10 S6055NRP
D8 SZ1.5SMC36AT3G
Out_3
Power_Board_Schematic[2C]
S4
C31 10000pF
C32 4.7uF
C33 4.7uF
C27 10000pF
IC4
D12
L4 15uH
VAR4
C28 330uF
C30 .011uF
R13 10k
J18
F4
R14 147
LED5
C29 0.1uF
Z6
R15 3k
C34 0.1uF
D13 S6055NRP
D11 SZ1.5SMC36AT3G
Out_4
Power_Board_Schematic[3C]