Jamulus / Zoom Setup for concert "sound guy"
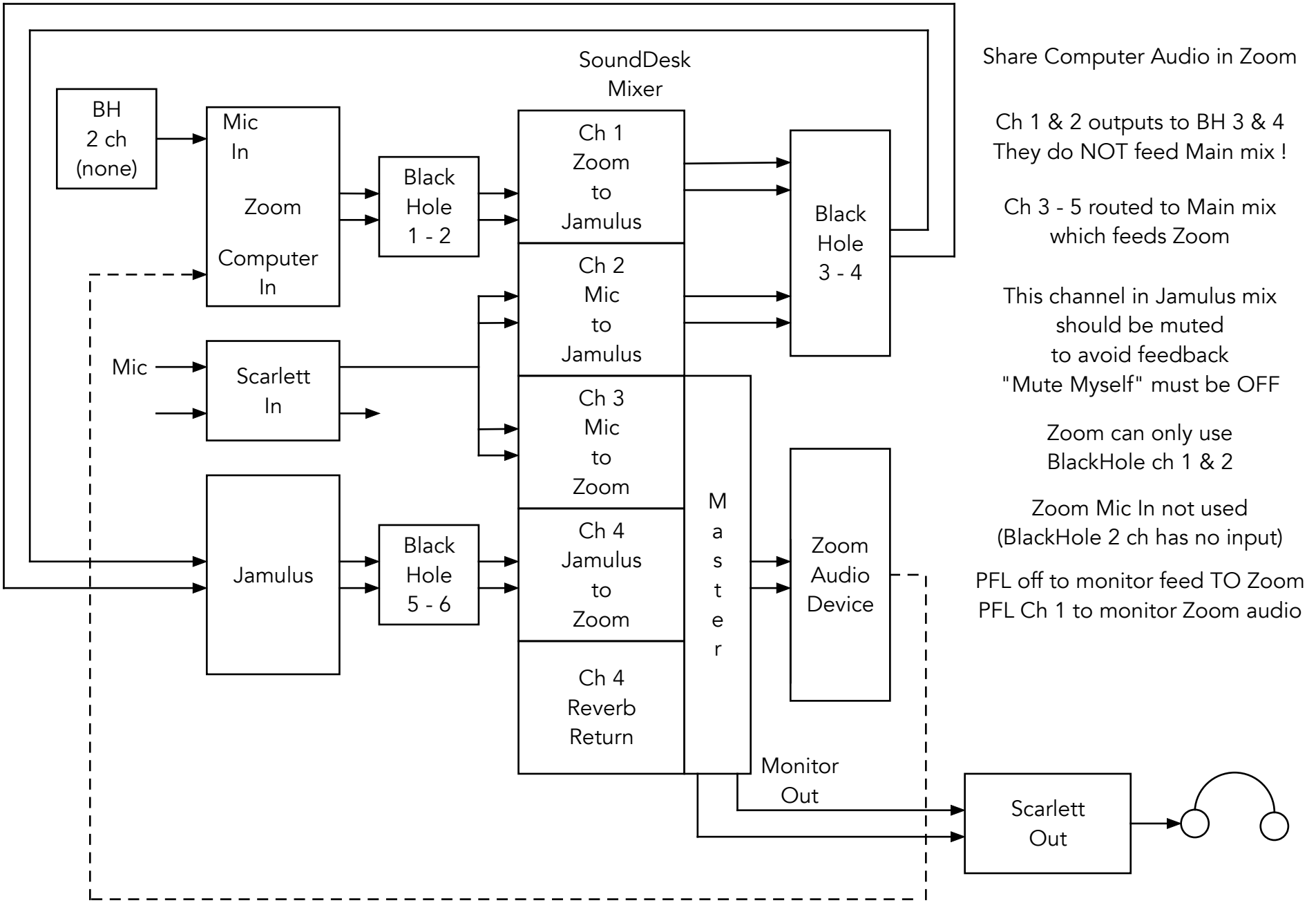
for Mac OS