GNDD=GND; GNDA=GND; VCC1V8D=VCC1V8; VCC1V8A=VCC1V8; VCC3V3D=VCC3V3; VCC3V3A=VCC3V3

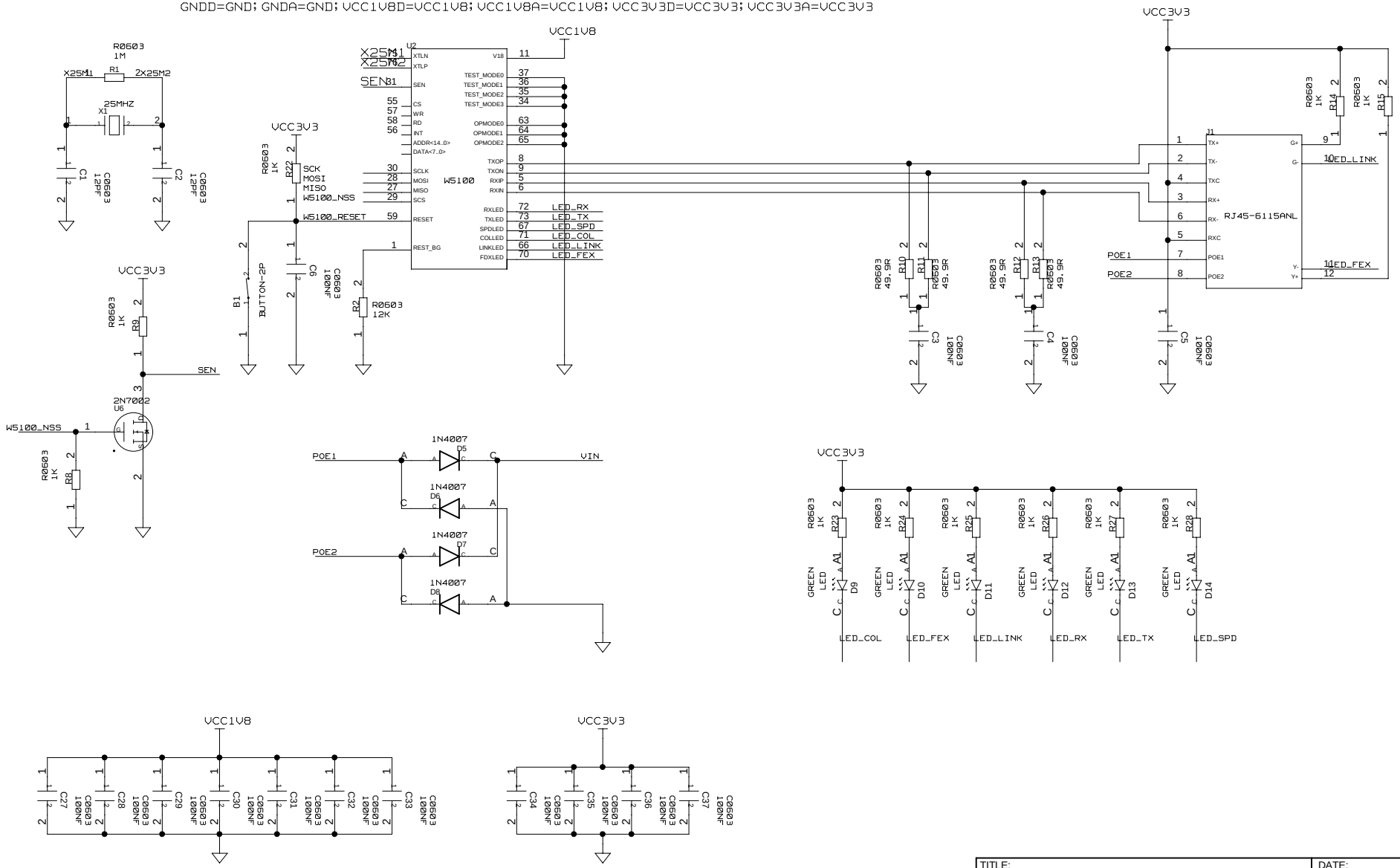

TITLE:	DATE:
ENGINEER:	PAGE:

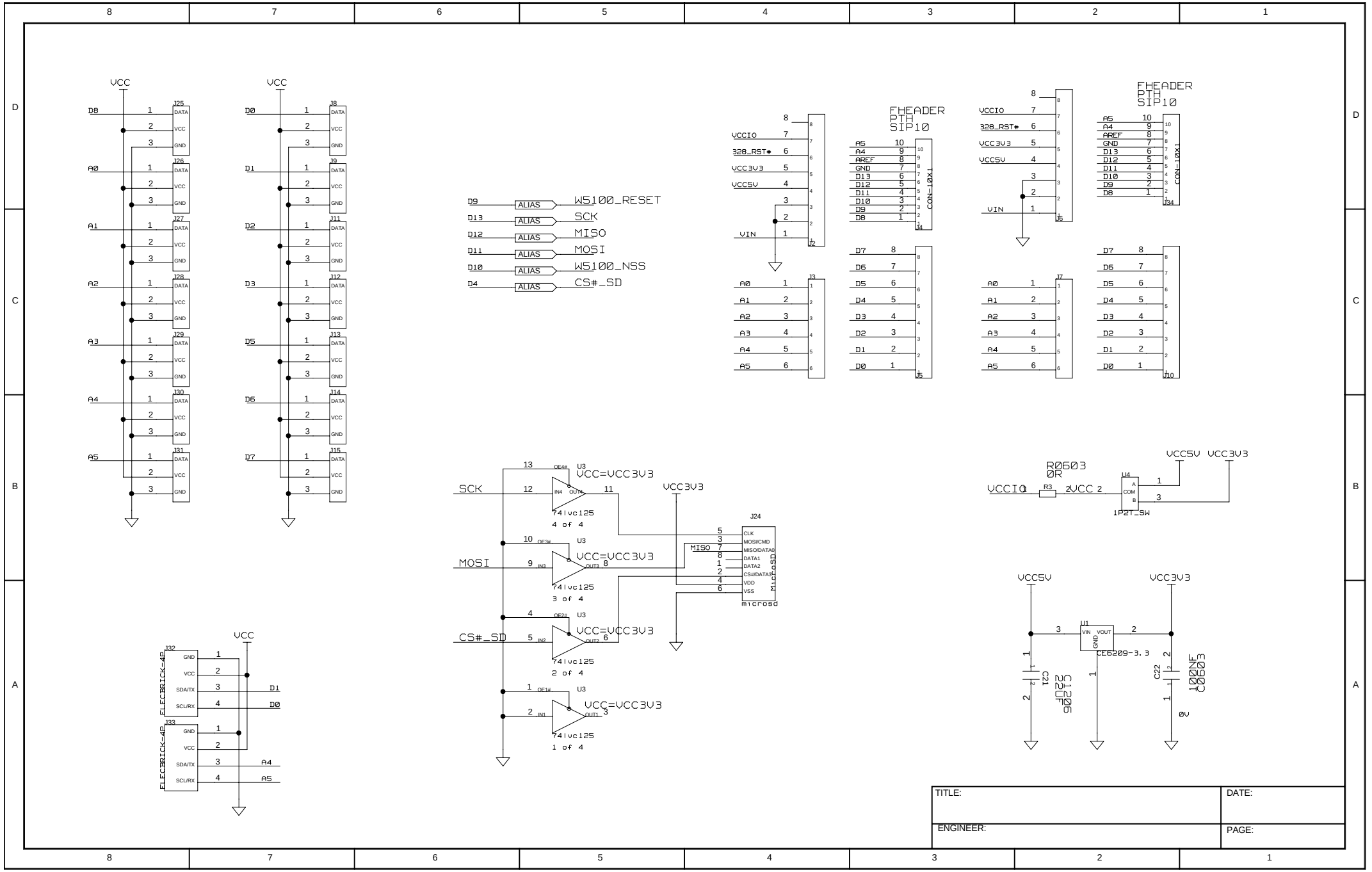

TITLE:	DATE:
ENGINEER:	PAGE: