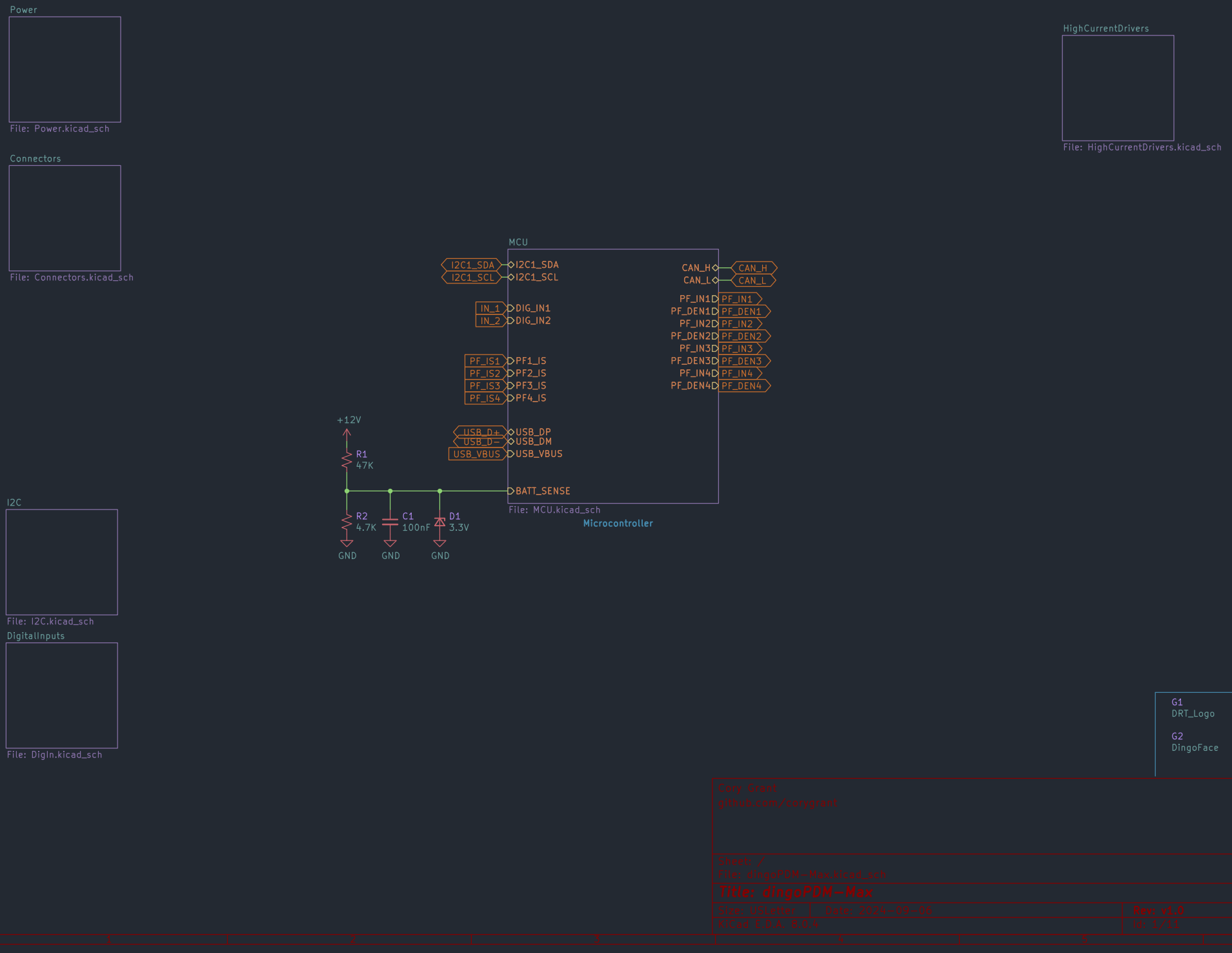
Power
File: Power.kicad_sch
Connectors
File: Connectors.kicad_sch
I2C
File: I2C.kicad_sch
DigitalInputs
File: DigIn.kicad_sch
HighCurrentDrivers
File: HighCurrentDrivers.kicad_sch
MCU
I2C1_SDA
I2C1_SCL
IN_1
IN_2
PF_IS1
PF_IS2
PF_IS3
PF_IS4
USB_D+
USB_D−
USB_VBUS
BATT_SENSE
I2C1_SDA
I2C1_SCL
DIG_IN1
DIG_IN2
PF1_IS
PF2_IS
PF3_IS
PF4_IS
USB_DP
USB_DM
USB_VBUS
CAN_H
CAN_L
PF_IN1
PF_DEN1
PF_IN2
PF_DEN2
PF_IN3
PF_DEN3
PF_IN4
PF_DEN4
File: MCU.kicad_sch
Microcontroller
+12V
R1
47K
R2
4.7K
C1
100nF
D1
3.3V
GND
GND
GND
G1
DRT_Logo
G2
DingoFace
Cory Grant
github.com/corygrant
Sheet: /
File: dingoPDM-Max.kicad_sch
Title: dingoPDM-Max
Size: USLetter
Date: 2024-09-06
Rev: v1.0
KiCad E.D.A. 8.0.4
Id: 1/11

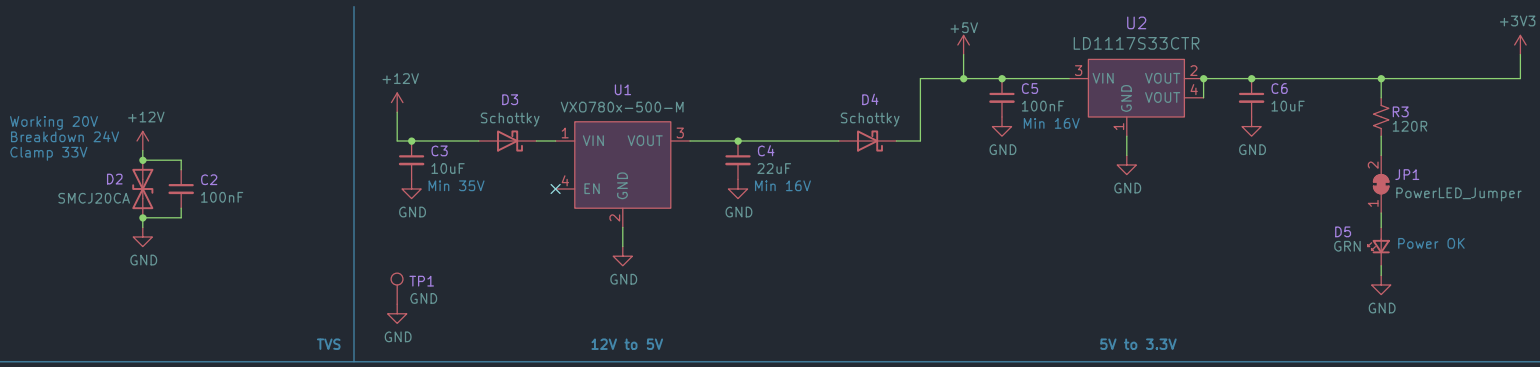

Cory Grant
github.com/corygrant

Sheet: /Power/
File: Power.kicad_sch

Title: dingoPDM-Max

Size: USLetter | Date: 2024-09-06 | **Rev: v1.0**

KiCad E.D.A. 8.0.4 | Id: 2/11

+12V

J1

J3

RedCubeTerminal

RedCubeTerminal

GND

Battery Lug

Mounting Holes

H1 M3

H2 M3

H3 M3

H4 M3

PF_OUT4

CAN_L

CAN_H

PF_OUT3

PF_OUT1

INPUT1

INPUT2

PF_OUT2

J4
Conn_01x12

Deutsch DT

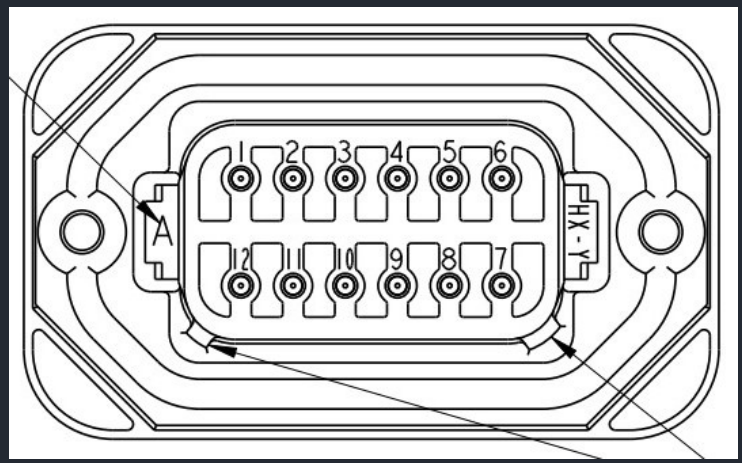

R4
4.7K

USB_VBUS

R5
10K

GND

+5V

D6
Schottky

J2
USB_C_Receptacle_USB2.0

VBUS
A4

CC1
A5

CC2
B5

D-
A7

D-
B7

D+
A6

D+
B6

R6
5.1K

R7
5.1K

GND

GND

USB_D-

USB_D+

SHIELD

GND

SBU1
A8

SBU2
B8

S1

A1

GND

GND

Cory Grant
github.com/corygrant

Sheet: /Connectors/
File: Connectors.kicad_sch

Title: dingoPDM-Max

Size: USLetter | Date: 2024-09-06 | Rev: v1.0

KiCad E.D.A. 8.0.4 | Id: 3/11

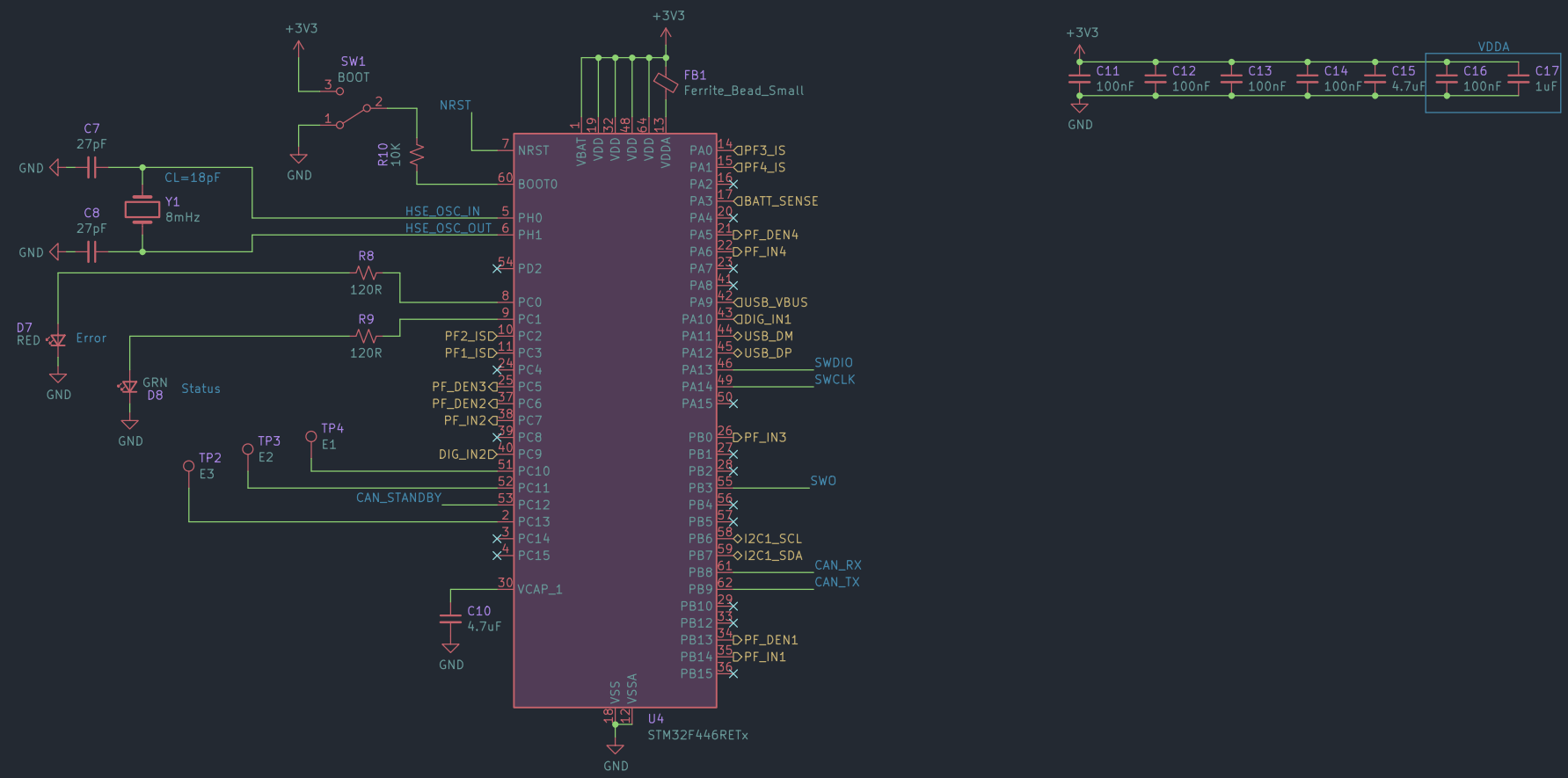

Cory Grant
github.com/corygrant

Sheet: /MCU/
File: MCU.kicad_sch

Title: dingoPDM-Max

Size: USLetter	Date: 2024-09-06	Rev: v1.0
KiCad E.D.A. 8.0.4		Id: 4/11

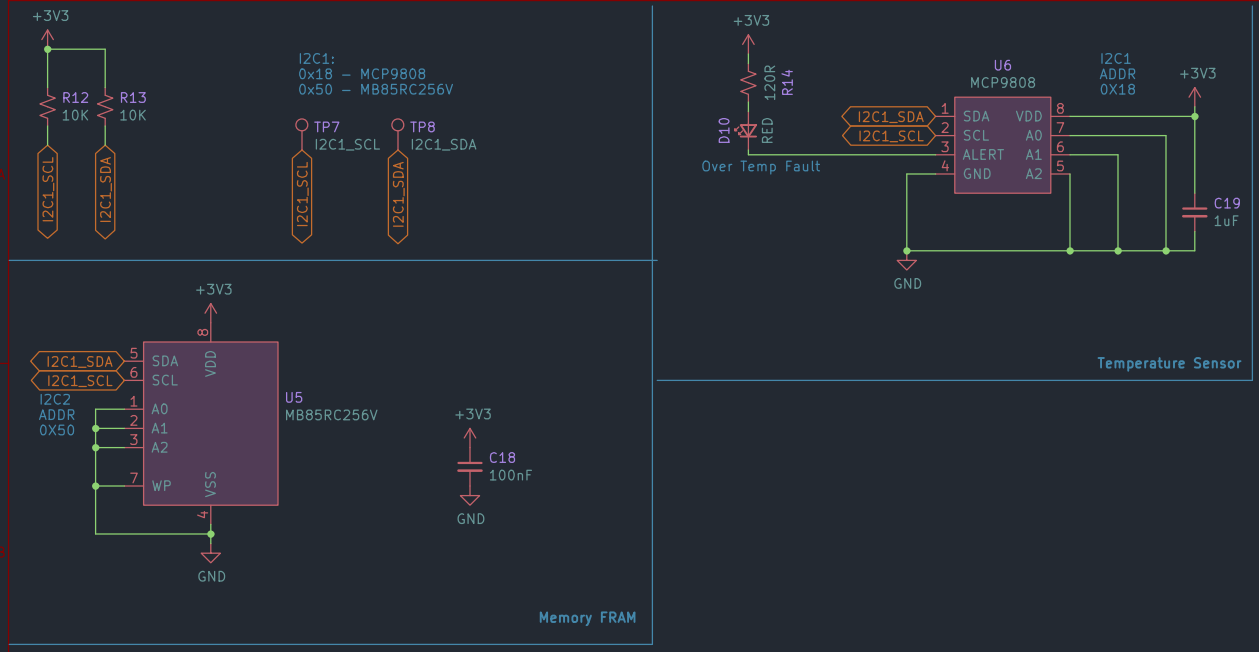

Cory Grant
github.com/corygrant

Sheet: /I2C/
File: I2C.kicad_sch

Title: dingoPDM-Max

Size: USLetter	Date: 2024-09-06	Rev: v1.0
KiCad E.D.A. 8.0.4		Id: 5/11

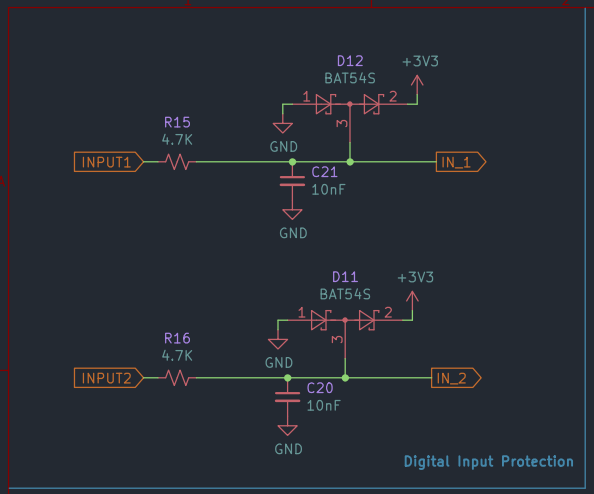

Cory Grant
github.com/corygrant

Sheet: /DigitalInputs/
File: DigIn.kicad_sch

Title: dingoPDM-Max

Size: USLetter	Date: 2024-09-06	Rev: v1.0
KiCad E.D.A. 8.0.4		Id: 6/11

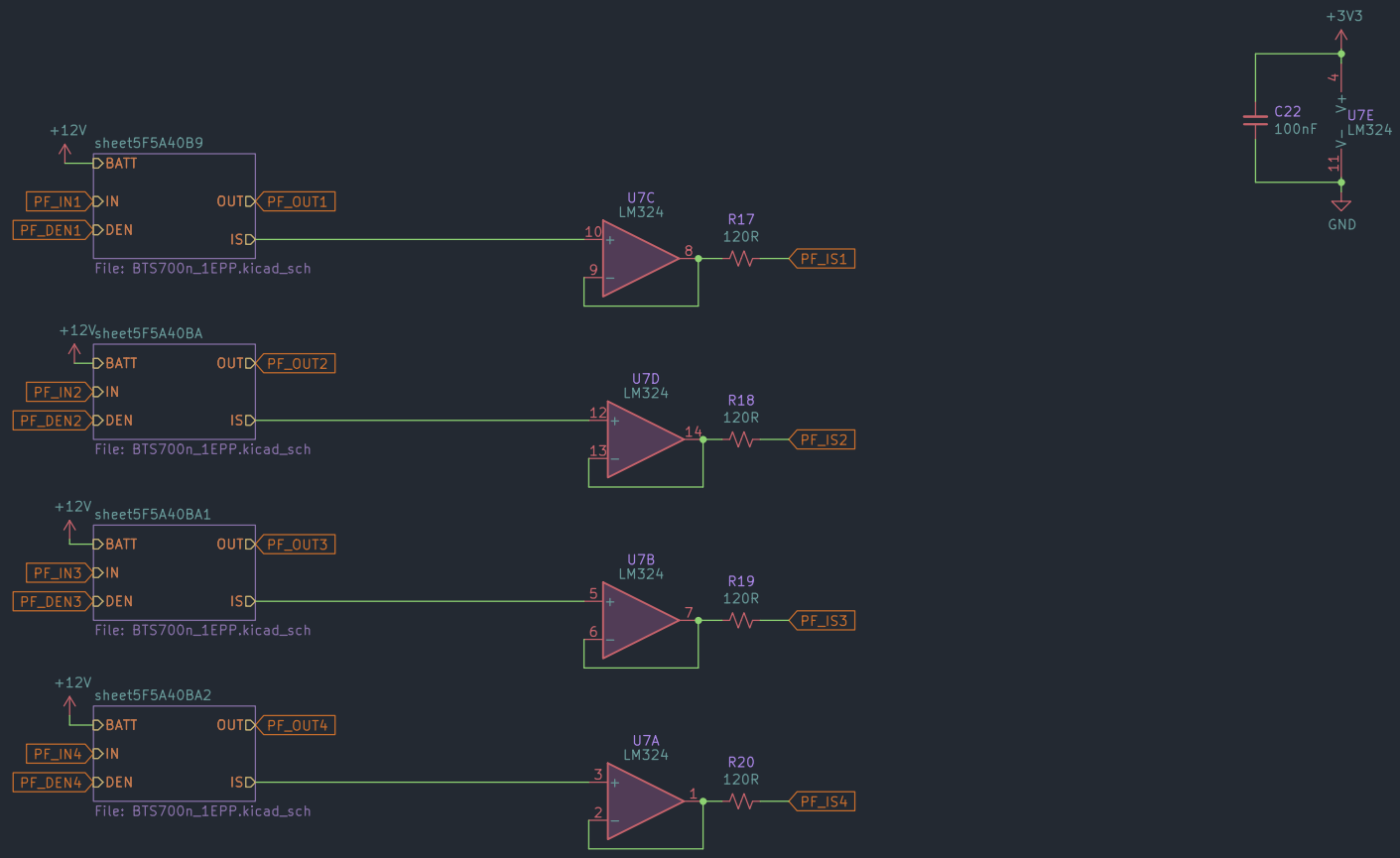

Cory Grant
github.com/corygrant

Sheet: /HighCurrentDrivers/
File: HighCurrentDrivers.kicad_sch

Title: dingoPDM-Max

Size: USLetter	Date: 2024-09-06	Rev: v1.0
KiCad E.D.A. 8.0.4		Id: 7/11

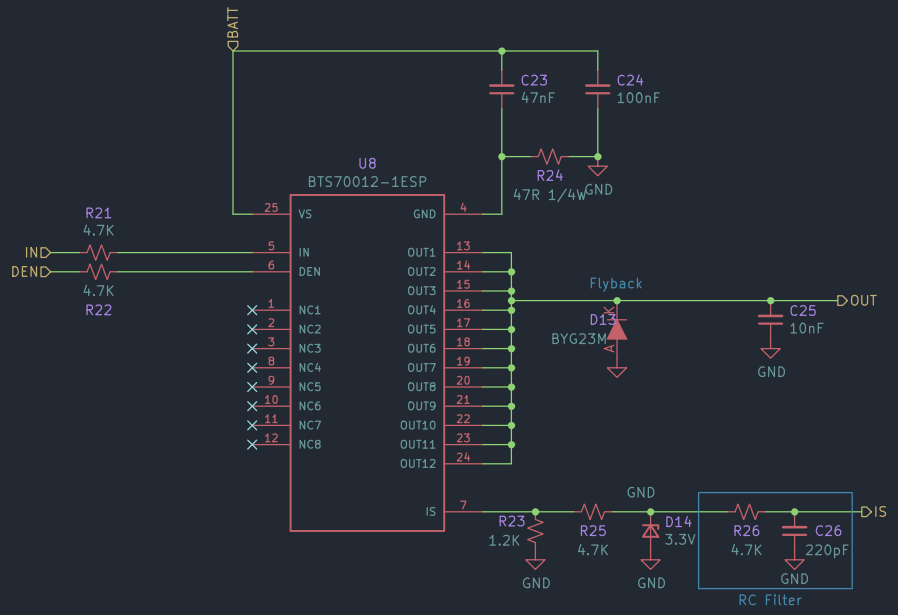

Cory Grant
github.com/corygrant

Sheet: /HighCurrentDrivers/sheet8F5A4089/
File: BTS700n_1EPP.kicad_sch

Title: dingoPDM-Max

Size: USLetter	Date: 2024-09-06	Rev: v1.0
KiCad E.D.A. 8.0.4		Id: 9/11

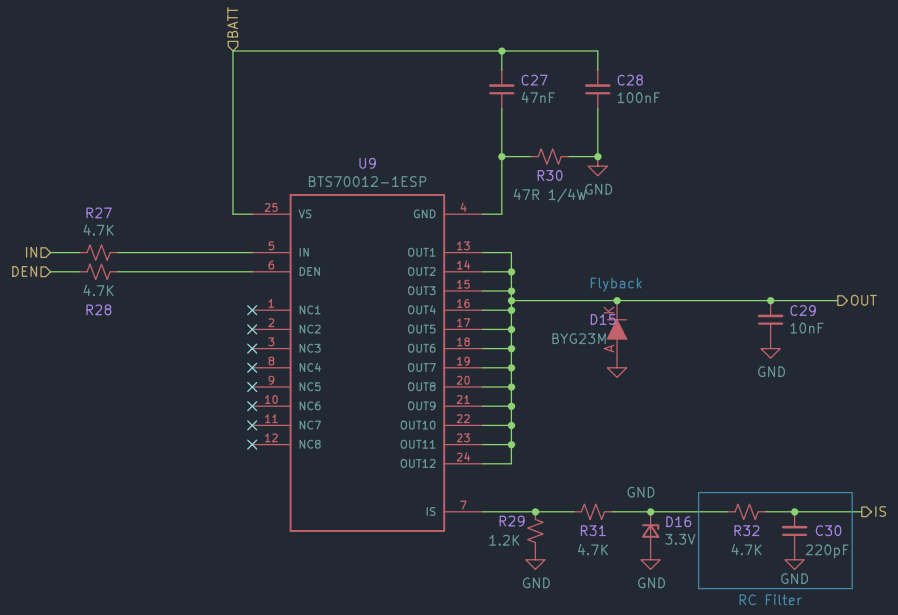

Cory Grant
github.com/corygrant

Sheet: /HighCurrentDrivers/sheet5F5A40BA/
File: BTS70012_1ESP.kicad_sch

Title: dingoPDM-Max

Size: USLetter	Date: 2024-09-06	Rev: v1.0
KiCad E.D.A. 8.0.4		Id: 11/11

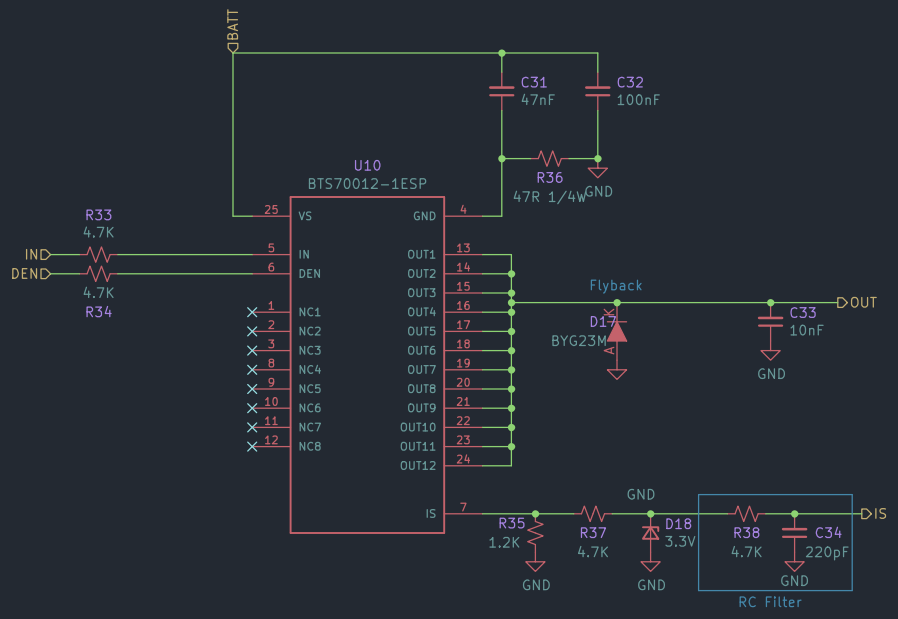

Cory Grant
github.com/corygrant

Sheet: /HighCurrentDrivers/sheet5F5A40BA1/
File: BTS70012_1ESP.kicad_sch

Title: dingoPDM-Max

Size: Unknown	Date: 2024-09-06	Rev: v1.0
KiCad E.D.A. 8.0.4		Id: 11/11

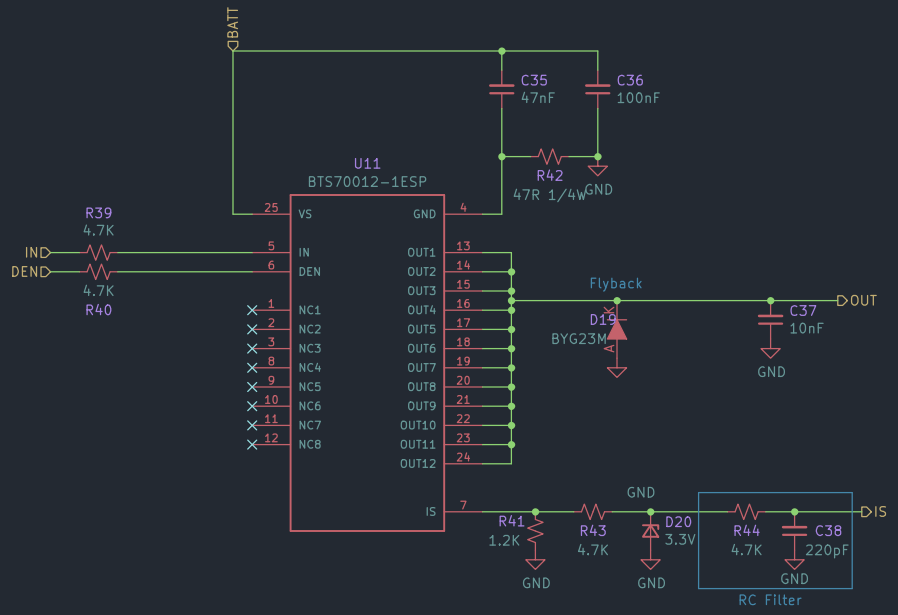

Cory Grant
github.com/corygrant

Sheet: /HighCurrentDrivers/sheet5F5A40BA2/
File: BTS70012_1ESP.kicad_sch

Title: dingoPDM-Max

Size: USLetter	Date: 2024-09-06	Rev: v1.0
KiCad E.D.A. 8.0.4		Id: 14/11