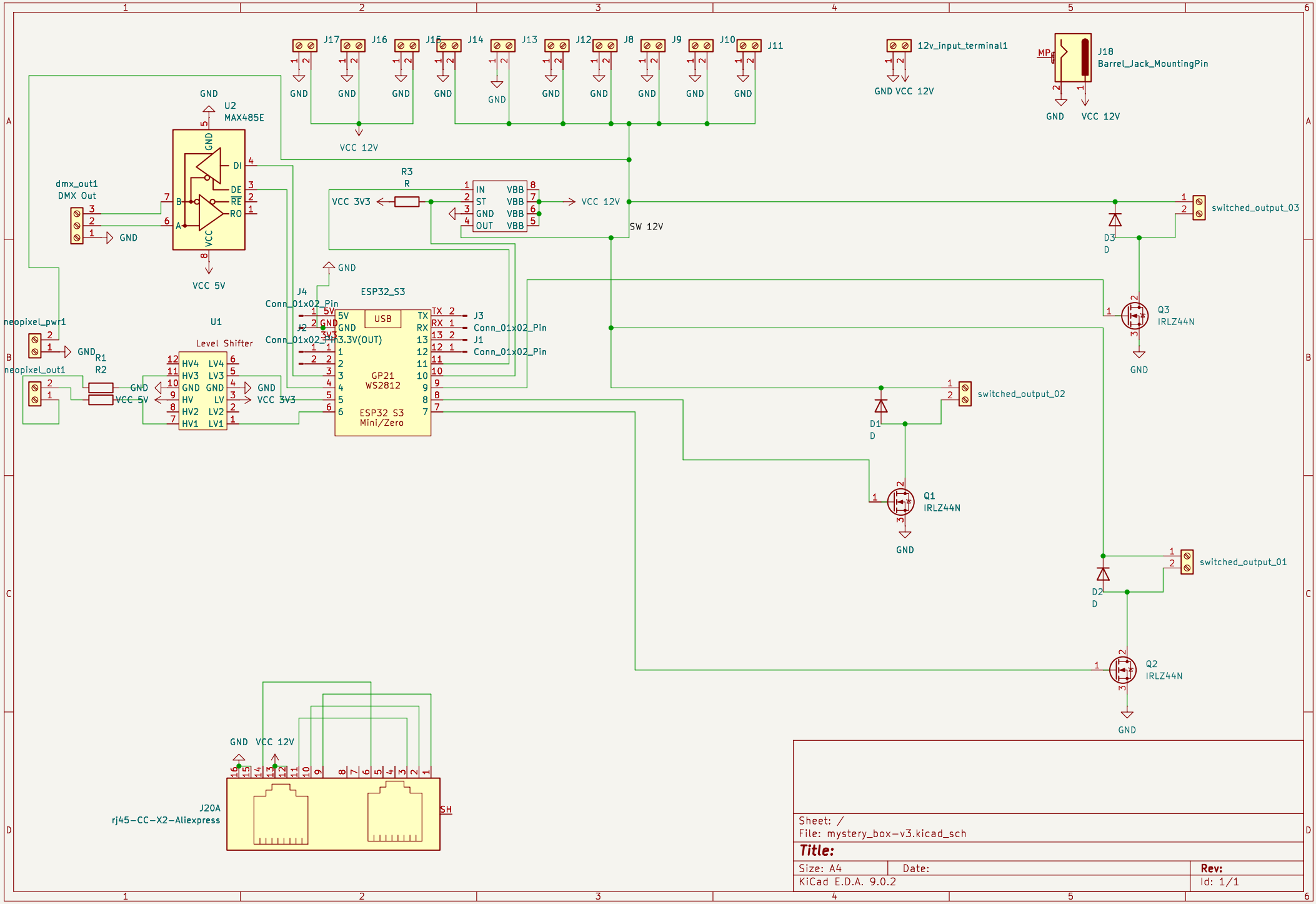
J17
J16
J15
J14
J13
J12
J8
J9
J10
J11
GND
VCC 12V
12v_input_terminal1
GND VCC 12V
J18
Barrel_Jack_MountingPin
MP
U2
MAX485E
DI
DE
RE
RO
VCC
dmx_out1
DMX Out
VCC 5V
R3
R
VCC 3V3
IN
ST
OUT
VBB
SW 12V
switched_output_03
D3
D
Q3
IRLZ44N
J4
Conn_01x02_Pin
J2
ESP32_S3
USB
5V
3V3
3.3V(OUT)
TX
RX
J3
J1
GP21
WS2812
ESP32 S3
Mini/Zero
neopixel_pwr1
neopixel_out1
R1
R2
U1
Level Shifter
HV4
HV3
HV
HV2
HV1
LV4
LV3
LV
LV2
LV1
switched_output_02
D1
Q1
switched_output_01
D2
Q2
J20A
rj45-CC-X2-Aliexpress
SH
Sheet: /
File: mystery_box-v3.kicad_sch
Title:
Size: A4
Date:
Rev:
KiCad E.D.A. 9.0.2
Id: 1/1