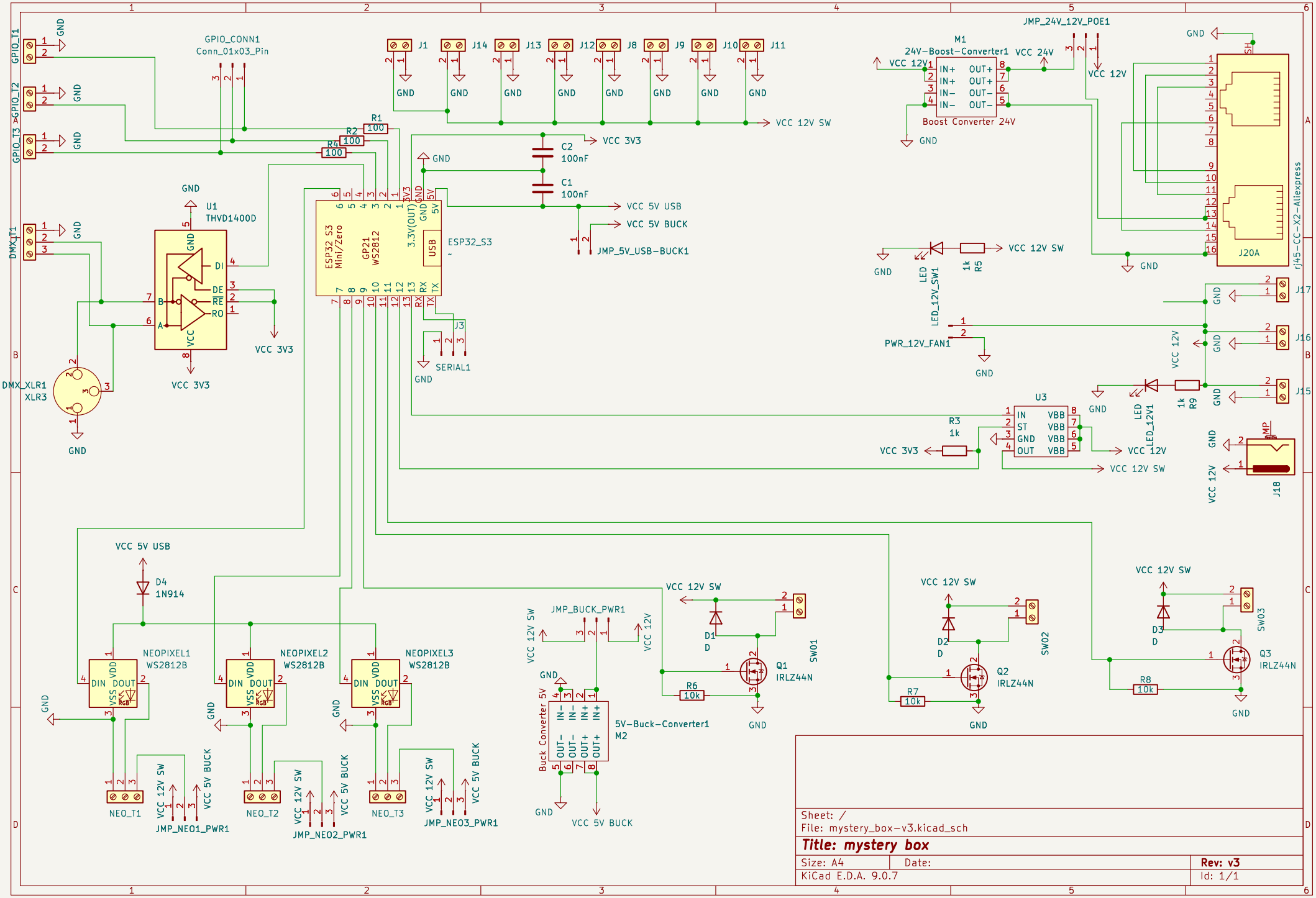

Sheet: /
File: mystery_box-v3.kicad_sch

Title: mystery box

Size: A4	Date:	Rev: v3
KiCad E.D.A. 9.0.7		Id: 1/1