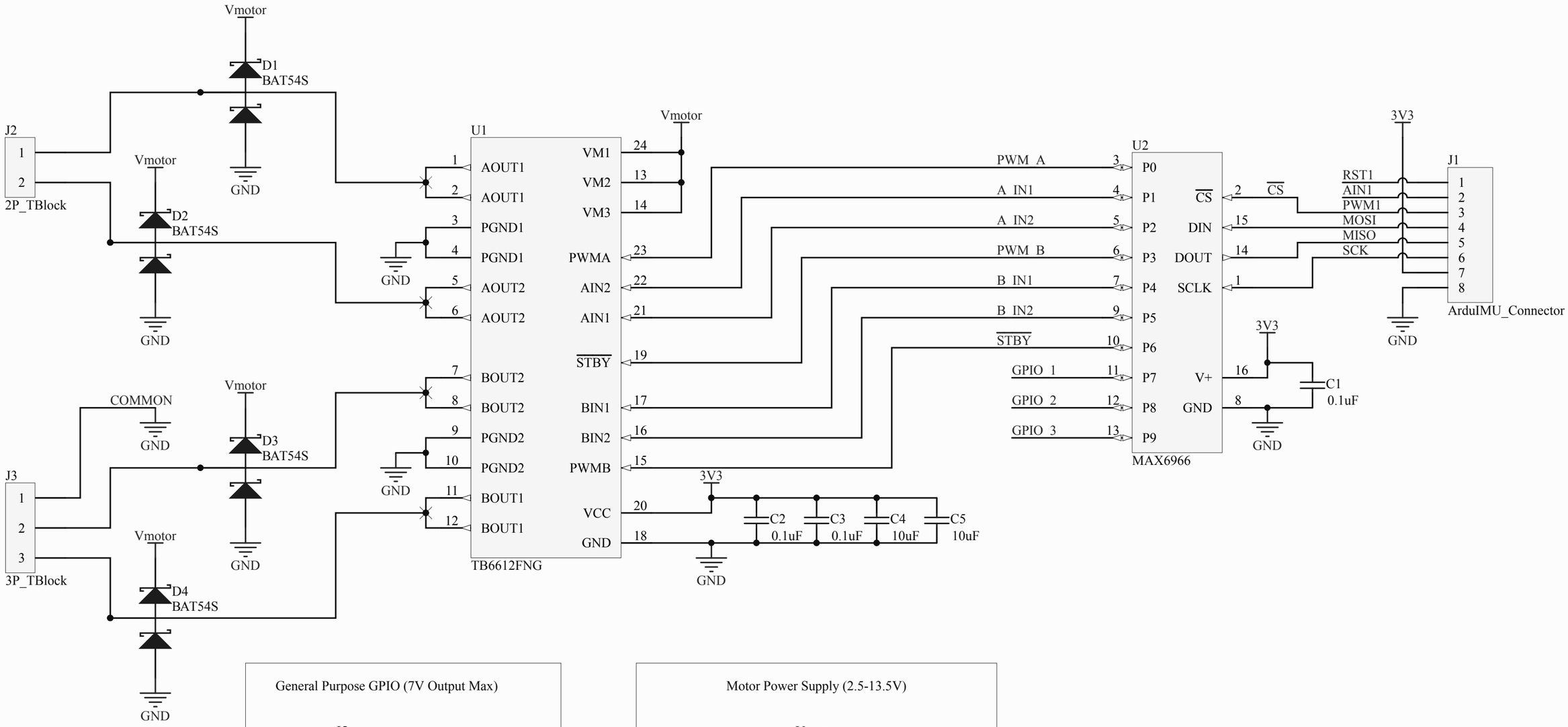

General Purpose GPIO (7V Output Max)

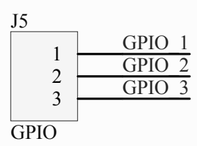

Extra GPIO/PWM broken-out for general use.
Great for driving constant current devices (LEDs)

Note: Power output limited by MAX6966.
Note: Uses ArduIMU 3V3 supply. May drain battery.

Motor Power Supply (2.5-13.5V)

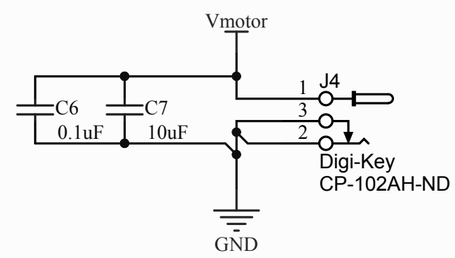

WARNING: No reverse battery protection.
Use center positive PSU!!

Title ArduIMU V4 Motor Shield Variant: [No Variations]		
Size A4	Number	Revision 1
Date: 2013-12-30		Sheet 1 of 1
File: G:\Dropbox\..\MotorShield.SchDoc		Drawn By: J.F.B.