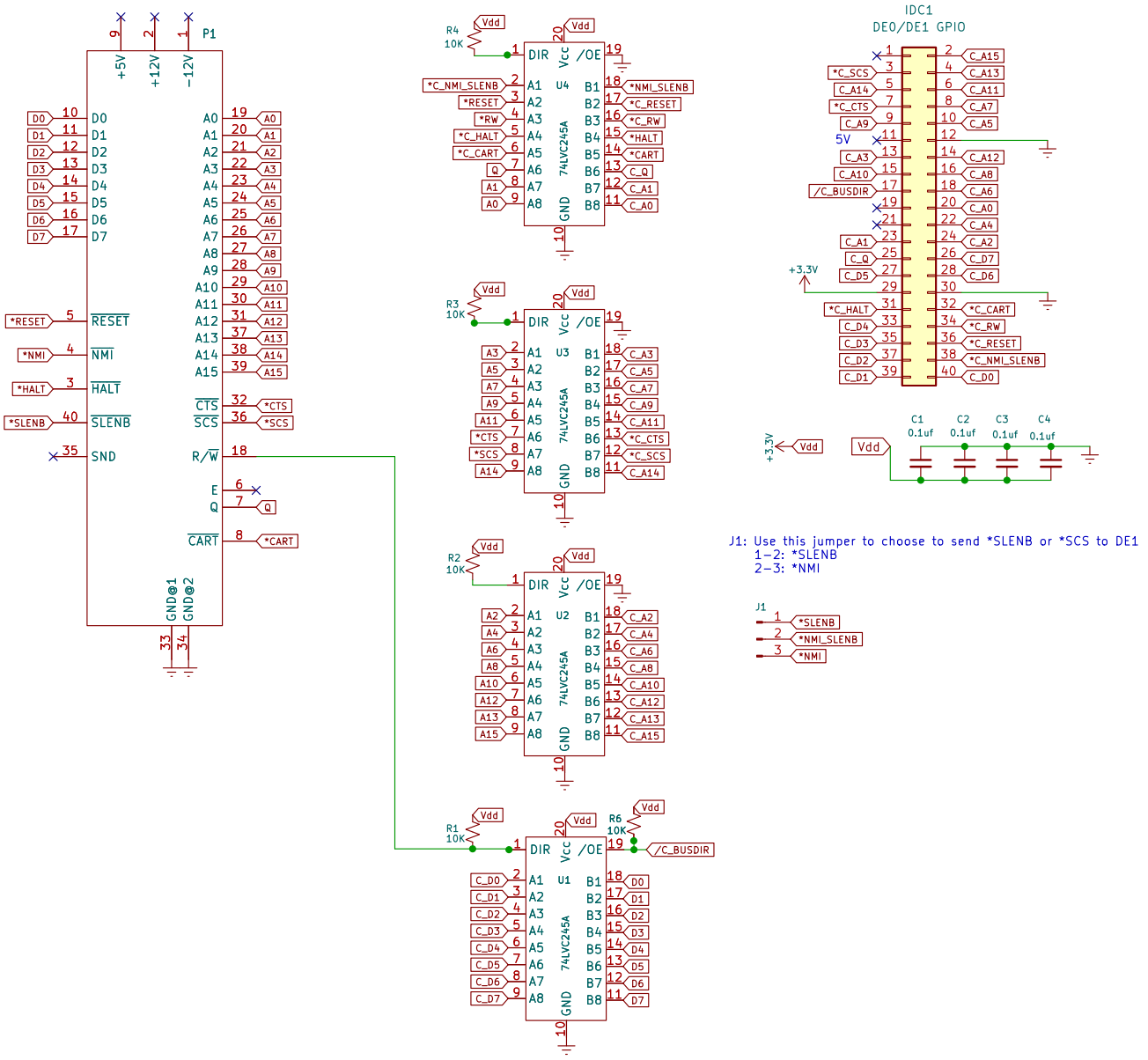

IDC connector pinout mapped for Altera DE0 & DE1 FPGA Development Board
Cartridge for TRS-80 Color Computers that expose the Computer BUS
to 3.3v systems with voltage conversion

RCC

Sheet: /
File: CoCo_FPGA_Hat.kicad_sch

Title: CoCo FPGA Hat (DE0 & DE1 Compatible)

Size: A4	Date: 2023-01-18	**Rev: 0**
KiCad E.D.A. eeschema (6.0.7)		Id: 1/1