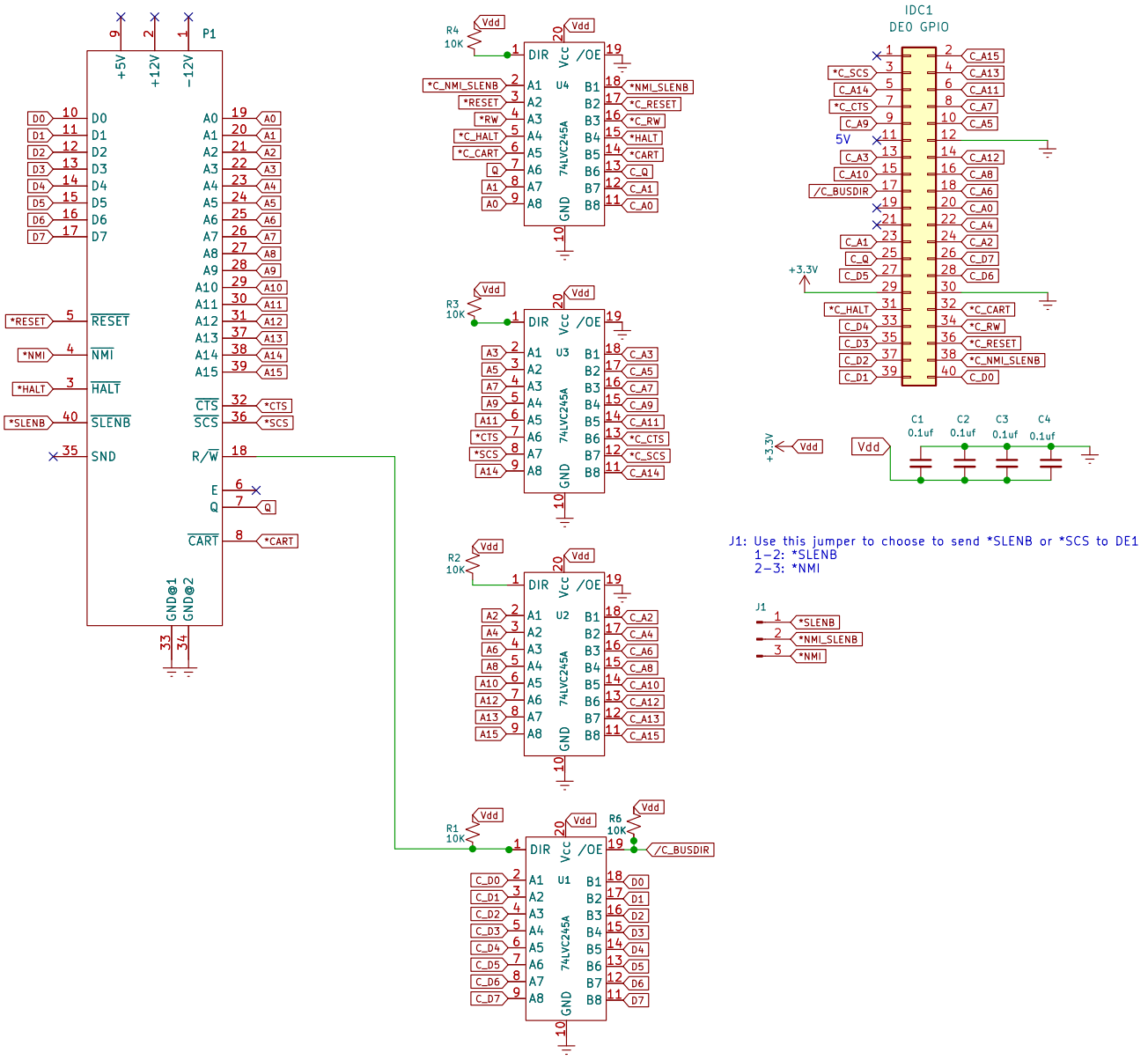

IDC connector pinout mapped for Altera DE0 FPGA Development Board Cartridge for TRS-80 Color Computers that expose the Computer BUS to 3.3v systems with voltage conversion

RCC

Sheet: /

File: CoCo_FPGA_Hat.kicad_sch

Title: CoCo FPGA Hat (DE0 Version)

Size: A4	Date: 2023-01-16	**Rev: Rev 0**
KiCad E.D.A. kicad (6.0.7)		Id: 1/1