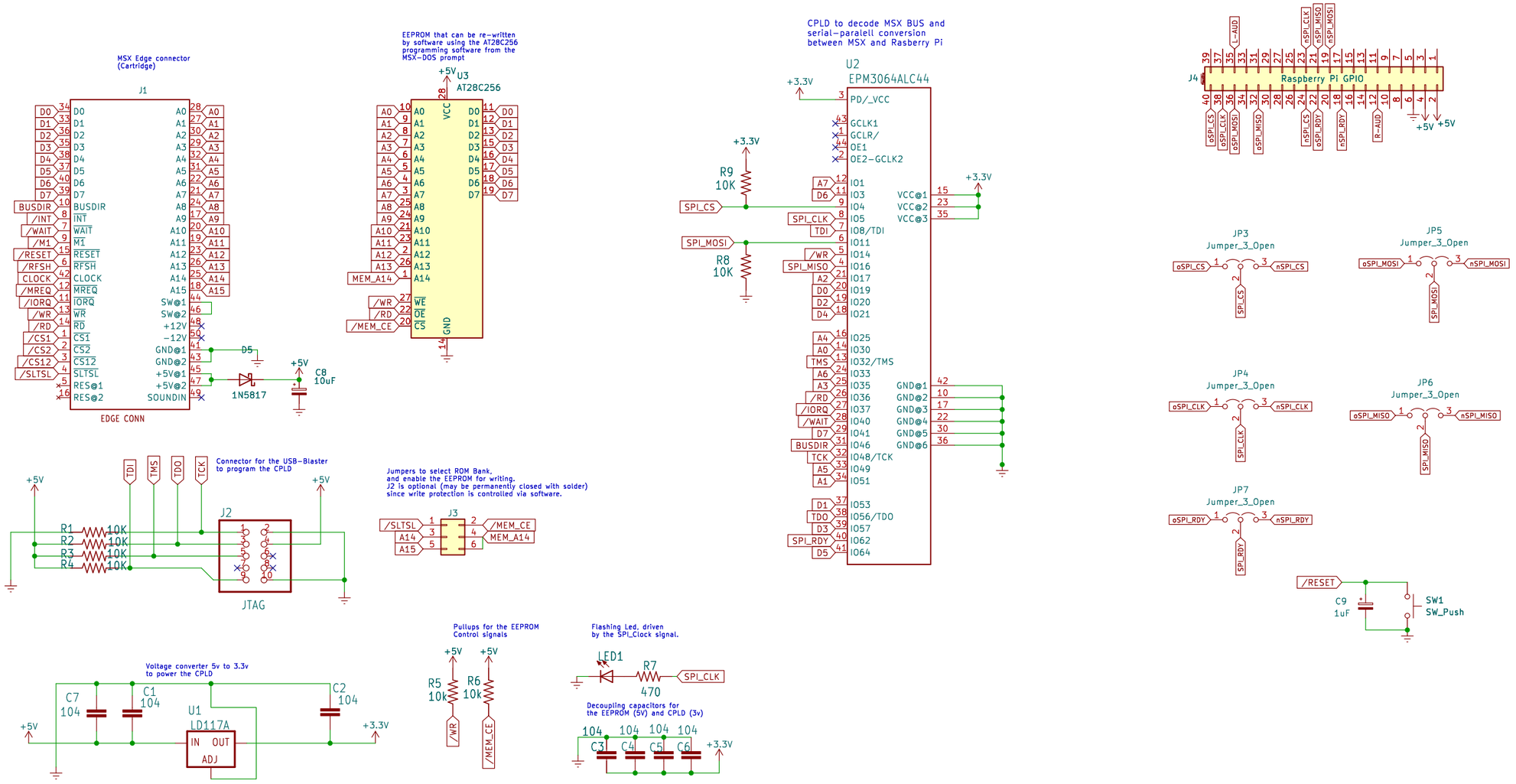

MSXPi Interface V1.2 Rev.0
RCC @ 2017 - 2025

MSXPi interface - connect MSX computer to Raspberry Pi
EEPROM AT28C256 re-writeatable from MSX-DOS
EEPROM software: https://github.com/costarc/msxcart_flash32k

2025-09-07