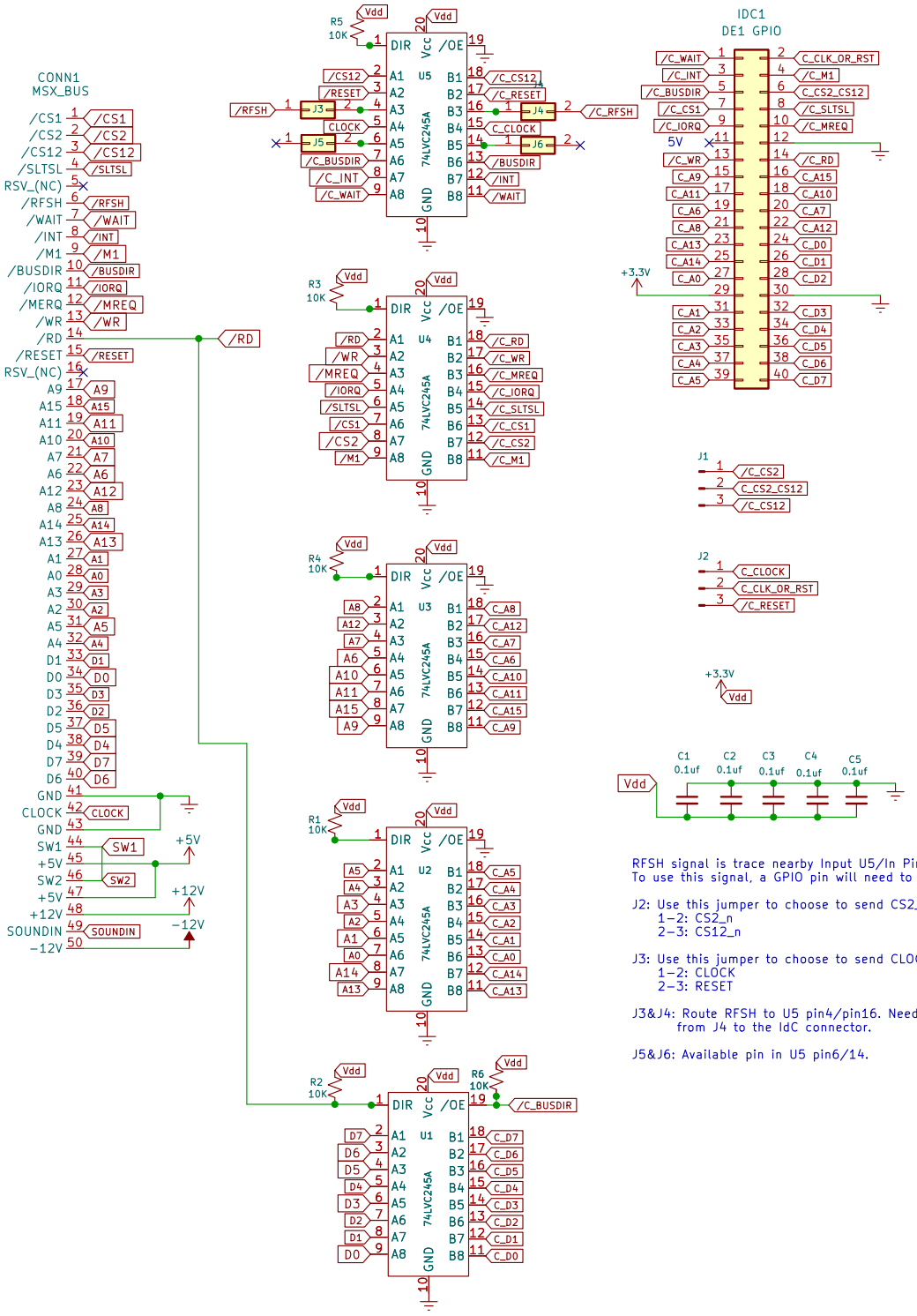

RFSH signal is trace nearby Input U5/In Pin 4/Out Pin 16.
To use this signal, a GPIO pin will need to be re-wired to pin 16.

J2: Use this jumper to choose to send CS2_n or CS12_n to IDC pin 6:
1-2: CS2_n
2-3: CS12_n

J3: Use this jumper to choose to send CLOCK or RESET signal to IDC pin 2:
1-2: CLOCK
2-3: RESET

J3&J4: Route RFSH to U5 pin4/pin16. Needs additional wiring to use this siganl, from J4 to the IdC connector.

J5&J6: Available pin in U5 pin6/14.

IDC connector pinout mapped for Altera DE1 FPGA Development Board
Cartridge for MSX Computers that expose the MSX BUS
to 3.3v systems with voltage conversion

RCC

Sheet: /
File: MSX_DE1_Hat.kicad_sch

Title: MSX DE1 Hat

Size: A4	Date: 2023-01-08	**Rev: 1.1**
KiCad E.D.A. eeschema (6.0.7)		Id: 1/1