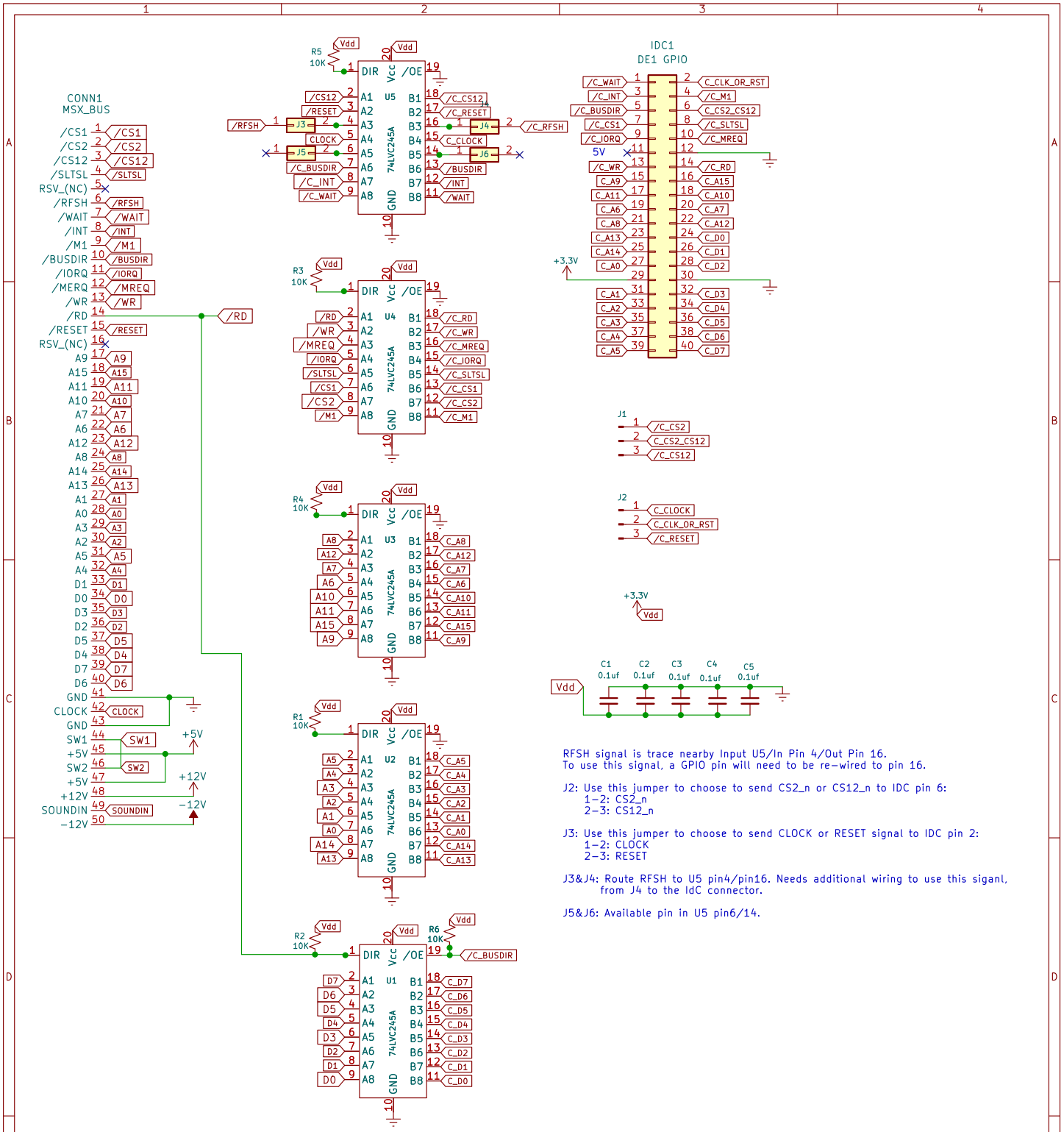

IDC connector pinout mapped for Altera DE1 FPGA Development Board
Cartridge for MSX Computers that expose the MSX BUS
to 3.3v systems with voltage conversion

RCC

Sheet: /
File: MSX_DE1_Hat.kicad_sch

Title: MSX DE1 Hat

Size: A4	Date: 2023-01-08	**Rev: 1.1**
KiCad E.D.A. kicad (6.0.7)		Id: 1/1