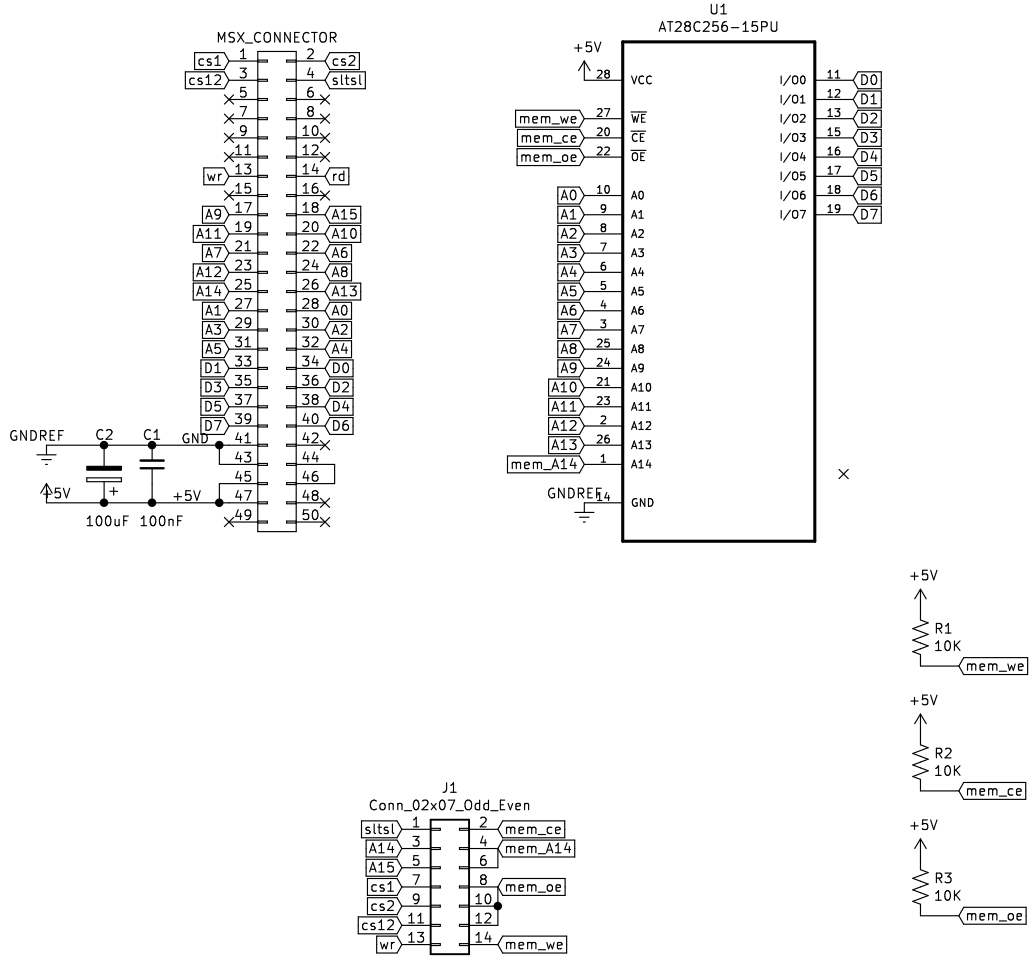

Ronivon Costa

Sheet: /
File: msx_eeprom.sch

Title: MSX AT28C256 EEPROM Programable Cartridge

Size: A4	Date: 25/08/2020	**Rev:** 4
KiCad E.D.A. kicad (5.1.5)-3		Id: 1/1