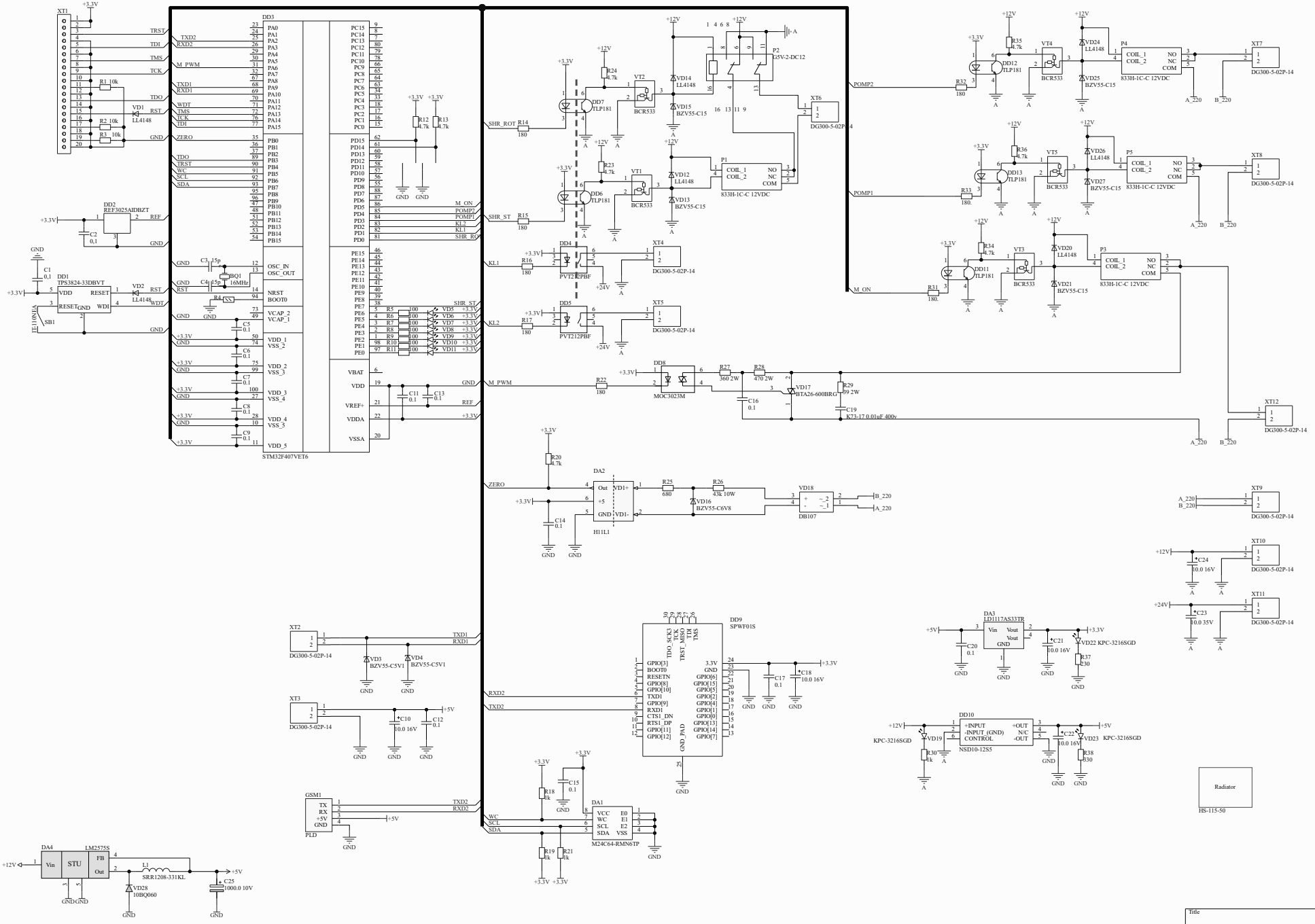
XT1
DD3
STM32F407VET6
DD2
REF3025AIDBZT
DD1
TPS3824-33DBVT
SB1
BQ1
16MHz
R4
R1 10k
R2 10k
R3 10k
VD1
LL4148
VD2
LL4148
C1 0.1
C2 0.1
C3 15p
C4 15p
C5 0.1
C6 0.1
C7 0.1
C8 0.1
C9 0.1
C11 0.1
C13 0.1
R12 4.7k
R13 4.7k
R5
R6
R7
R8
R9
R10
R11
VD5
VD6
VD7
VD8
VD9
VD10
VD11
SHR_ROT
SHR_ST
KL1
KL2
M_PWM
ZERO
M_ON
POMP2
POMP1
SHR_RO
REF
TXD1
RXD1
TXD2
RXD2
WC
SCL
SDA
DD7
TLP181
DD6
TLP181
DD4
PVT212PBF
DD5
PVT212PBF
R14 180
R15 180
R16 180
R17 180
R24 4.7k
R23 4.7k
VT2
BCR533
VT1
BCR533
VD14
LL4148
VD15
BZV55-C15
VD12
LL4148
VD13
BZV55-C15
P2
G5V-2-DC12
XT6
DG300-5-02P-14
P1
833H-1C-C 12VDC
XT4
DG300-5-02P-14
XT5
DG300-5-02P-14
DD8
MOC3023M
R22 180
R27 360 2W
R28 470 2W
C16 0.1
VD17
BTA26-600BRG
R29 39 2W
C19
K73-17 0.01uF 400v
DD12
TLP181
DD13
TLP181
DD11
TLP181
R35 4.7k
R36 4.7k
R34 4.7k
R32 180
R33 180.
R31 180.
VT4
BCR533
VT5
BCR533
VT3
BCR533
VD24
LL4148
VD25
BZV55-C15
VD26
LL4148
VD27
BZV55-C15
VD20
LL4148
VD21
BZV55-C15
P4
P5
P3
833H-1C-C 12VDC
XT7
DG300-5-02P-14
XT8
DG300-5-02P-14
XT12
DG300-5-02P-14
A_220
B_220
XT9
DG300-5-02P-14
XT10
DG300-5-02P-14
XT11
DG300-5-02P-14
C24 10.0 16V
C23 10.0 35V
R20 4.7k
DA2
H11L1
R25 680
R26 43k 10W
VD16
BZV55-C6V8
VD18
DB107
C14 0.1
XT2
DG300-5-02P-14
VD3
BZV55-C5V1
VD4
BZV55-C5V1
XT3
DG300-5-02P-14
C10 10.0 16V
C12 0.1
DD9
SPWF01S
C17 0.1
C18 10.0 16V
DA3
LD1117AS33TR
C20 0.1
C21 10.0 16V
VD22 KPC-3216SGD
R37 330
DD10
NSD10-12S5
VD19
KPC-3216SGD
R30 4k
C22 10.0 16V
VD23 KPC-3216SGD
R38 330
GSM1
PLD
C15 0.1
R18 1k
R19 1k
R21 1k
DA1
M24C64-RMN6TP
DA4
LM2575S
L1
SRR1208-331KL
VD28
10BQ060
C25 1000.0 10V
Radiator
HS-115-50
Title
Size
A2
Number
Revision
Date: 8.03.2023
Sheet of
File: D:\Yandex.Disk\...\Sheet_Cilulit_v2.0.SchDoc
Drawn By: