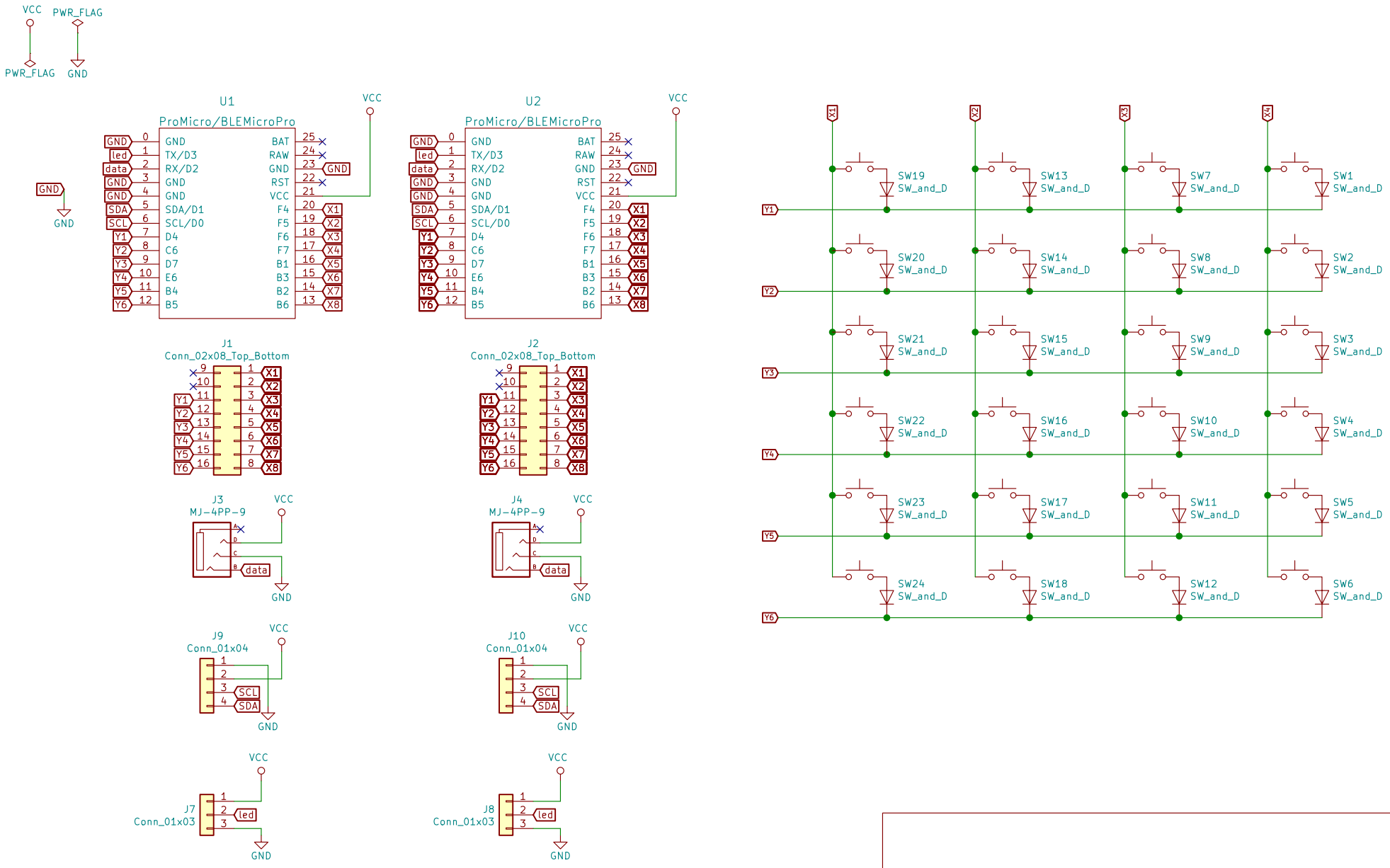

@e3w2q

Sheet: /

File: te96.sch

Title: te96 Sukeroku Keyboard

Size: A4	Date:	Rev: 3
KiCad E.D.A. kicad (5.0.2)-1		Id: 1/1