Test Questions

This section will give you a general idea of Segment 1 of the CSWP Exam.
These images are to be used to answer Questions #1 – 3.

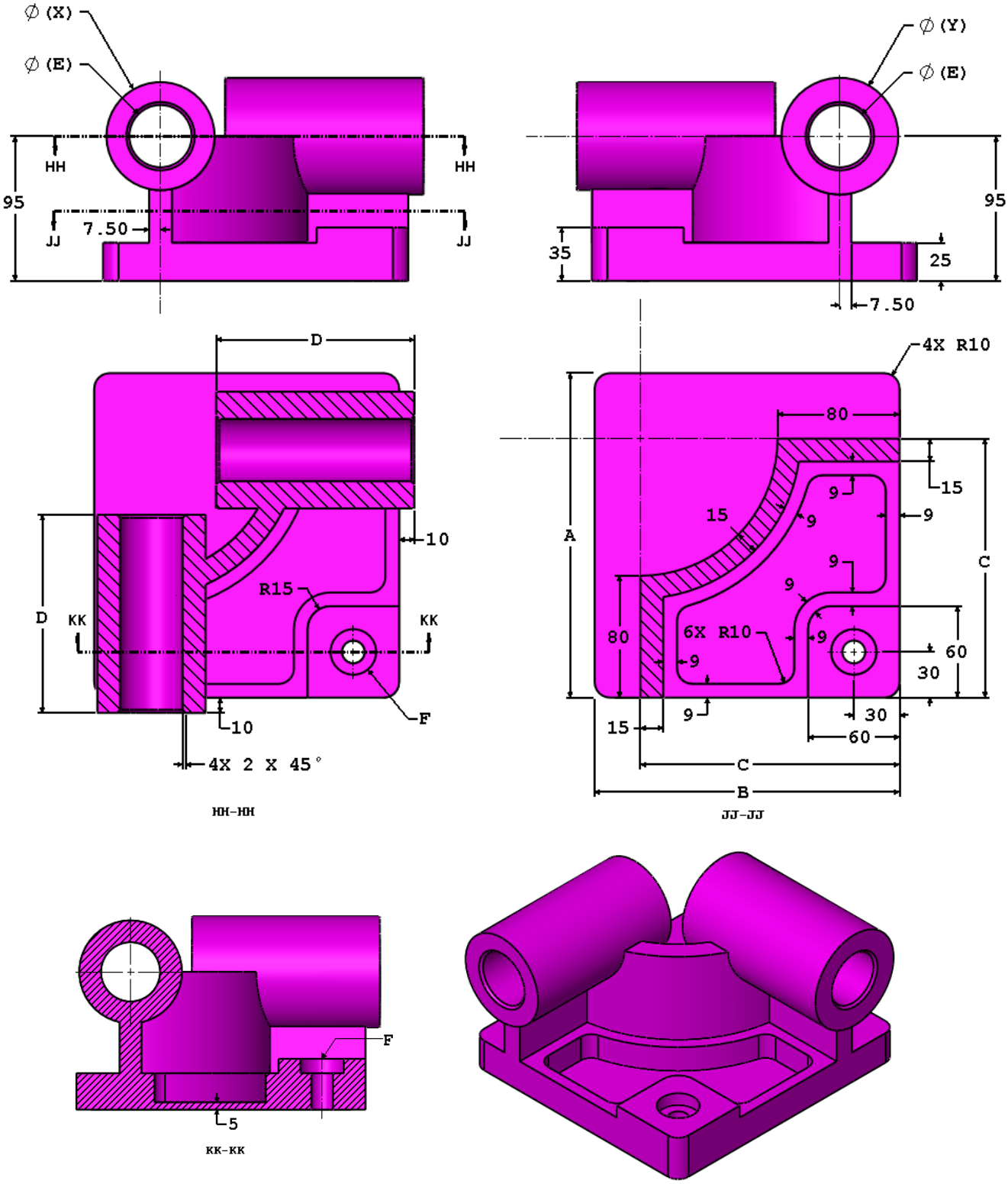

1. Stage 1 – Initial Part
Build this part in SOLIDWORKS.

Unit system: MMGS (millimeter, gram, second)
Decimal places: 2
Part origin: Arbitrary
Material: Alloy Steel
Density = 0.0077 g/mm^3
All holes through all unless shown otherwise

Use the following parameters and equations which correspond to the dimensions labeled in the images:

A = 213 mm
B = 200 mm
C = 170 mm
D = 130 mm
E = 41 mm
F = Hole Wizard Standard: Ansi Metric Counterbore
    Type: Hex Bolt – ANSI B18.2.3.5M
    Size: M8
    Fit: Close
    Through Hole Diameter: 15.00 mm
    Counterbore Diameter: 30.00 mm
    Counterbore Depth: 10.00 mm
    End Condition: Through All
X = A/3
Y = B/3 + 10mm

Hint 1: The dimensions that are to be linked or updated and are variable will be labeled with letters. Any dimensions that are simple value changes or refer to new features from one stage to another will be circled in the images.

Hint 2: To save the most time, make use of linked dimensional values and equations.

Measure the mass of the part.

What is the mass of the part (grams)?

a) 14139.65
b) 14298.56
c) 15118.41
d) 14207.34

2. Update parameters of the initial part.

Unit system: MMGS (millimeter, gram, second)
Decimal places: 2
Part origin: Arbitrary
Material: Alloy Steel
Density = 0.0077 g/mm^3
All holes through all unless shown otherwise

Use the following parameters and equations which correspond to the dimensions labeled in the images:

A = 225 mm
B = 210 mm
C = 176 mm
D = 137 mm
E = 39 mm
F = Hole Wizard Standard: Ansi Metric Counterbore
    Type: Hex Bolt – ANSI B18.2.3.5M
    Size: M8
    Fit: Close
    Through Hole Diameter: 15.00 mm
    Counterbore Diameter: 30.00 mm
    Counterbore Depth: 10.00 mm
    End Condition: Through All
X = A/3
Y = B/3 + 10mm

Hint 1: The dimensions that are to be linked or updated and are variable will be labeled with letters. Any dimensions that are simple value changes or refer to new features from one stage to another will be circled in the images.

Hint 2: To save the most time, make use of linked dimensional values and equations.

What is the mass of the part (grams)?

3. Update parameters of the initial part.

Unit system: MMGS (millimeter, gram, second)
Decimal places: 2
Part origin: Arbitrary
Material: Alloy Steel
Density = 0.0077 g/mm^3
All holes through all unless shown otherwise

Use the following parameters and equations which correspond to the dimensions labeled in the images:

A = 209 mm
B = 218 mm
C = 169 mm
D = 125 mm
E = 41 mm
F = Hole Wizard Standard: Ansi Metric Counterbore
    Type: Hex Bolt – ANSI B18.2.3.5M
    Size: M8
    Fit: Close
    Through Hole Diameter: 15.00 mm
    Counterbore Diameter: 30.00 mm
    Counterbore Depth: 10.00 mm
    End Condition: Through All
X = A/3
Y = B/3 + 10mm

Hint 1: The dimensions that are to be linked or updated and are variable will be labeled with letters. Any dimensions that are simple value changes or refer to new features from one stage to another will be circled in the images.

Hint 2: To save the most time, make use of linked dimensional values and equations.

What is the mass of the part (grams)?

These images are to be used to answer Questions #4 and 5.

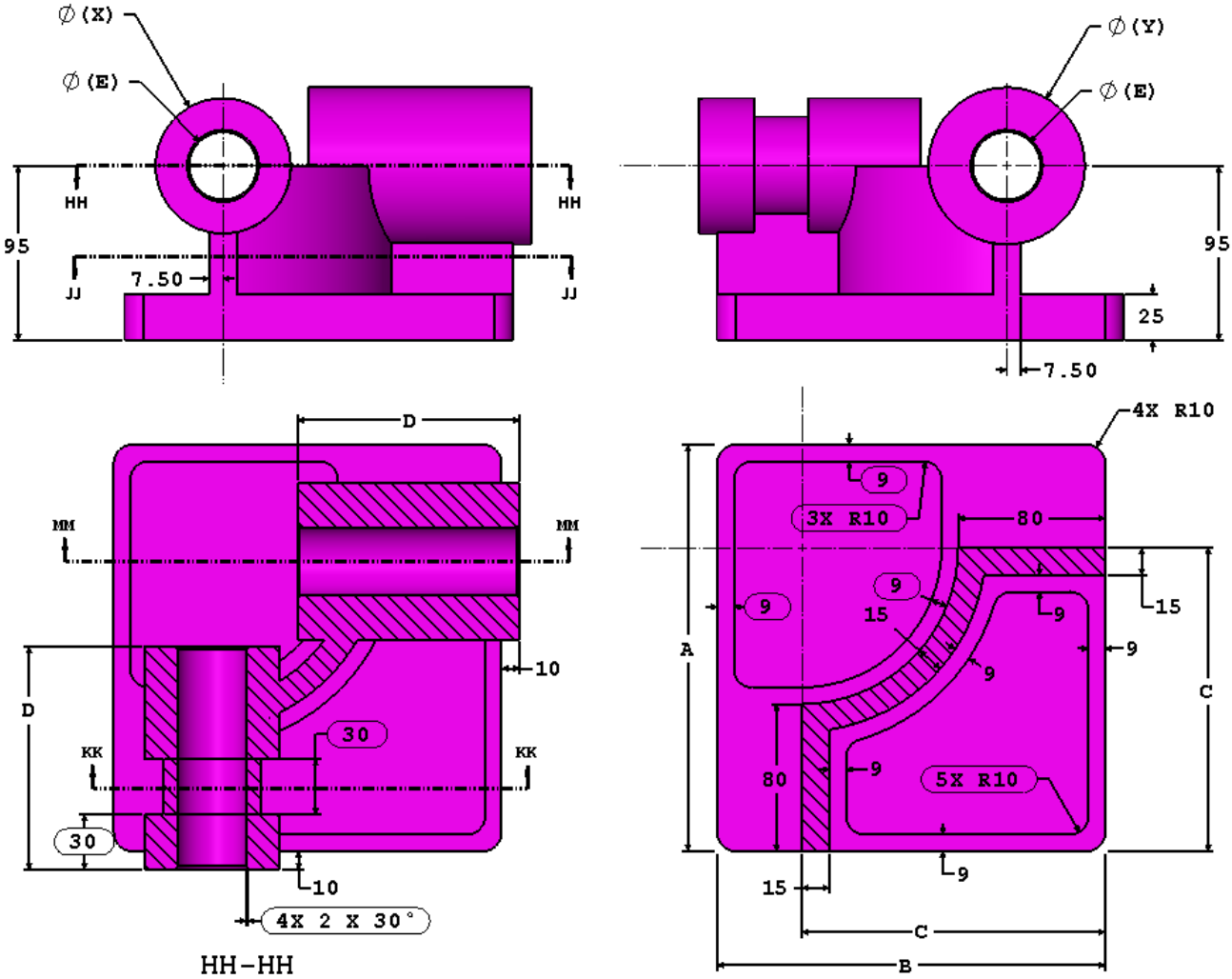

4. Stage 2 – Modify

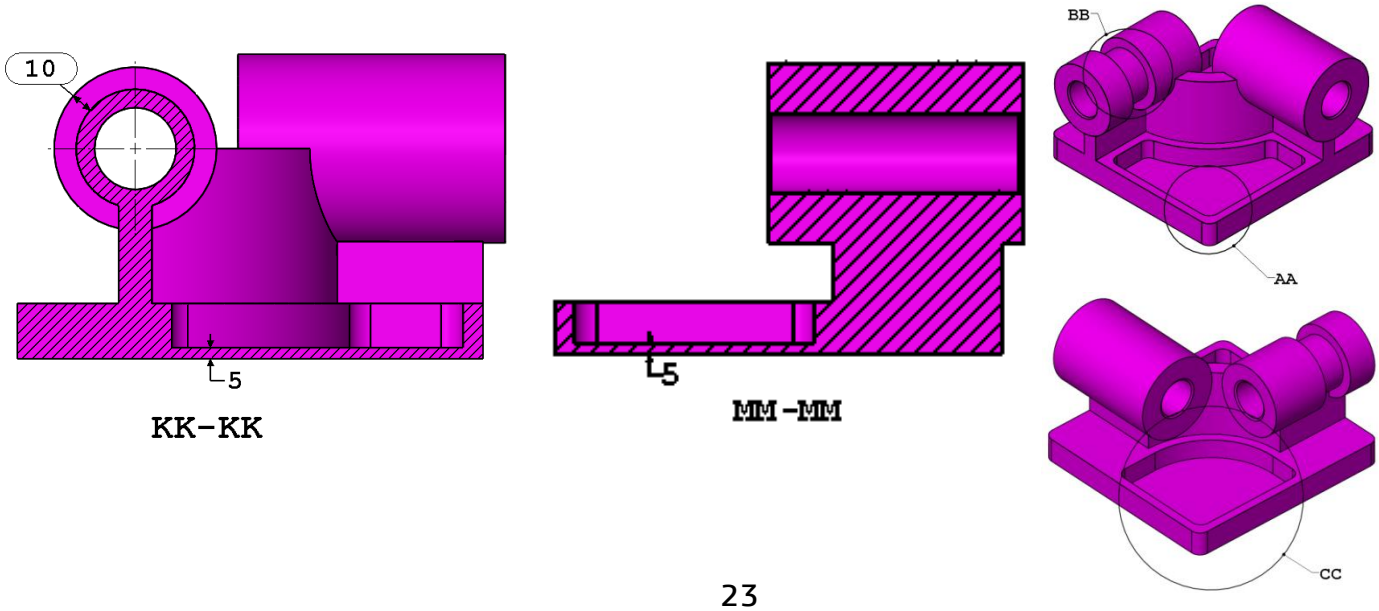

Modify the part using the following dimensions.

Note: The changes from the initial part are concentrated in areas AA, BB and CC shown in the images.

Unit system: MMGS (millimeter, gram, second)
Decimal places: 2
Part origin: Arbitrary
Material: Alloy Steel
Density = 0.0077 g/mm^3
All holes through all unless shown otherwise

Use the following parameters and equations which correspond to the dimensions labeled in the images:

A = 221 mm
B = 211 mm
C = 165 mm
D = 121 mm
E = 37 mm
X = A/3
Y = B/3 + 15mm

Note: The equation for Y has changed from the initial part.

Hint 1: The dimensions that are to be linked or updated and are variable will be labeled with letters. Any dimensions that are simple value changes or refer to new features from one stage to another will be circled in the images.

Hint 2: To save the most time, make use of linked dimensional values and equations.

Measure the mass of the part.

What is the mass of the part (grams)?

a) 13095.40
b) 13206.40
c) 13313.35
d) 13395.79

5. Stage 2 – Update Parameters

Unit system: MMGS (millimeter, gram, second)
Decimal places: 2
Part origin: Arbitrary
Material: Alloy Steel
Density = 0.0077 g/mm^3
All holes through all unless shown otherwise

Use the following parameters and equations which correspond to the dimensions labeled in the images:

A = 229 mm
B = 217 mm
C = 163 mm
D = 119 mm
E = 34 mm
X = A/3
Y = B/3 + 15mm

Hint 1: The dimensions that are to be linked or updated and are variable will be labeled with letters. Any dimensions that are simple value changes or refer to new features from one stage to another will be circled in the images.

Hint 2: To save the most time, make use of linked dimensional values and equations.

Measure the mass of the part.

What is the mass of the part (grams)?

END OF TEST